0 600 888 103

Stand } ~~01-05~~
Issue } 03-04-09

Fig./Abb. 1

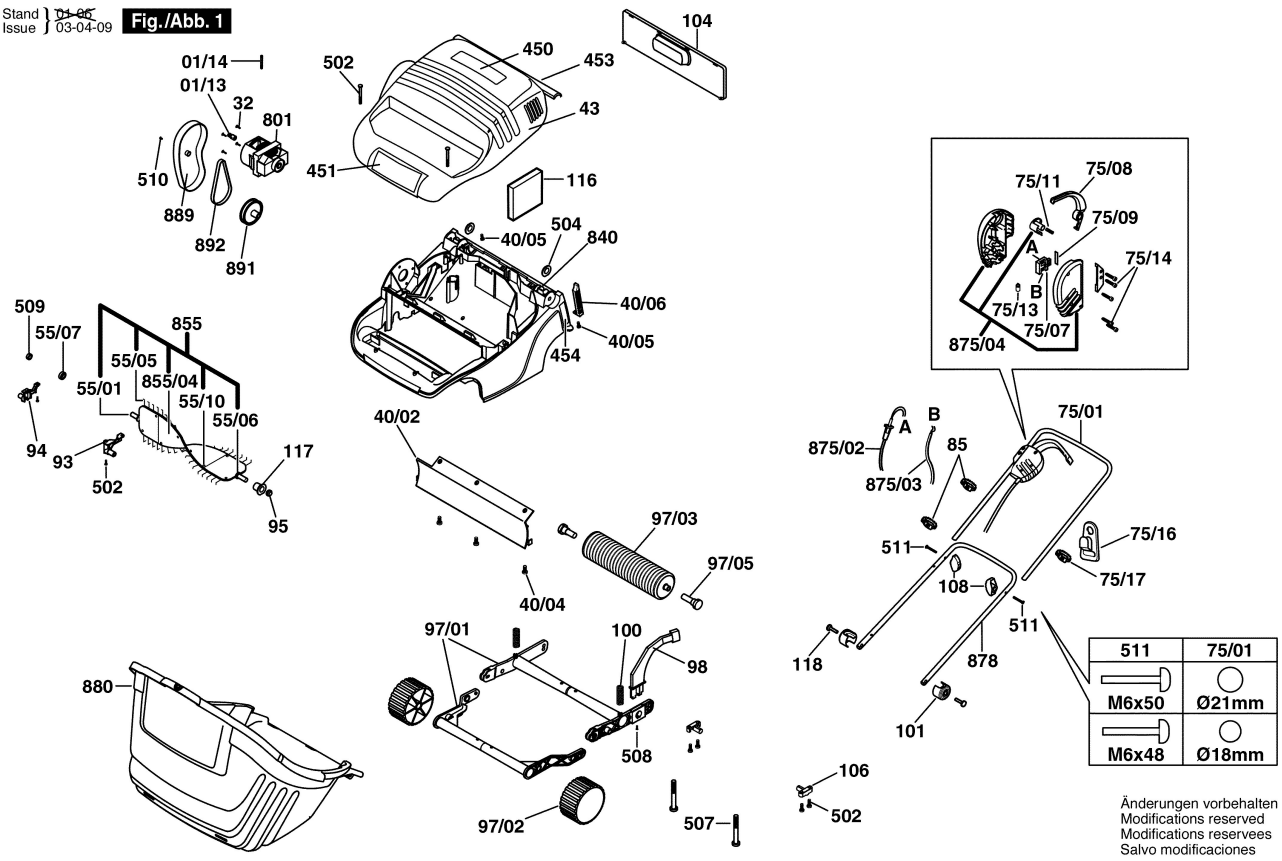

Änderungen vorbehalten
Modifications reserved
Modifications reservees
Salvo modificaciones