0 600 889 003

Stand } ~~00-05~~
Issue } 00-07-18

Fig./Abb. 1

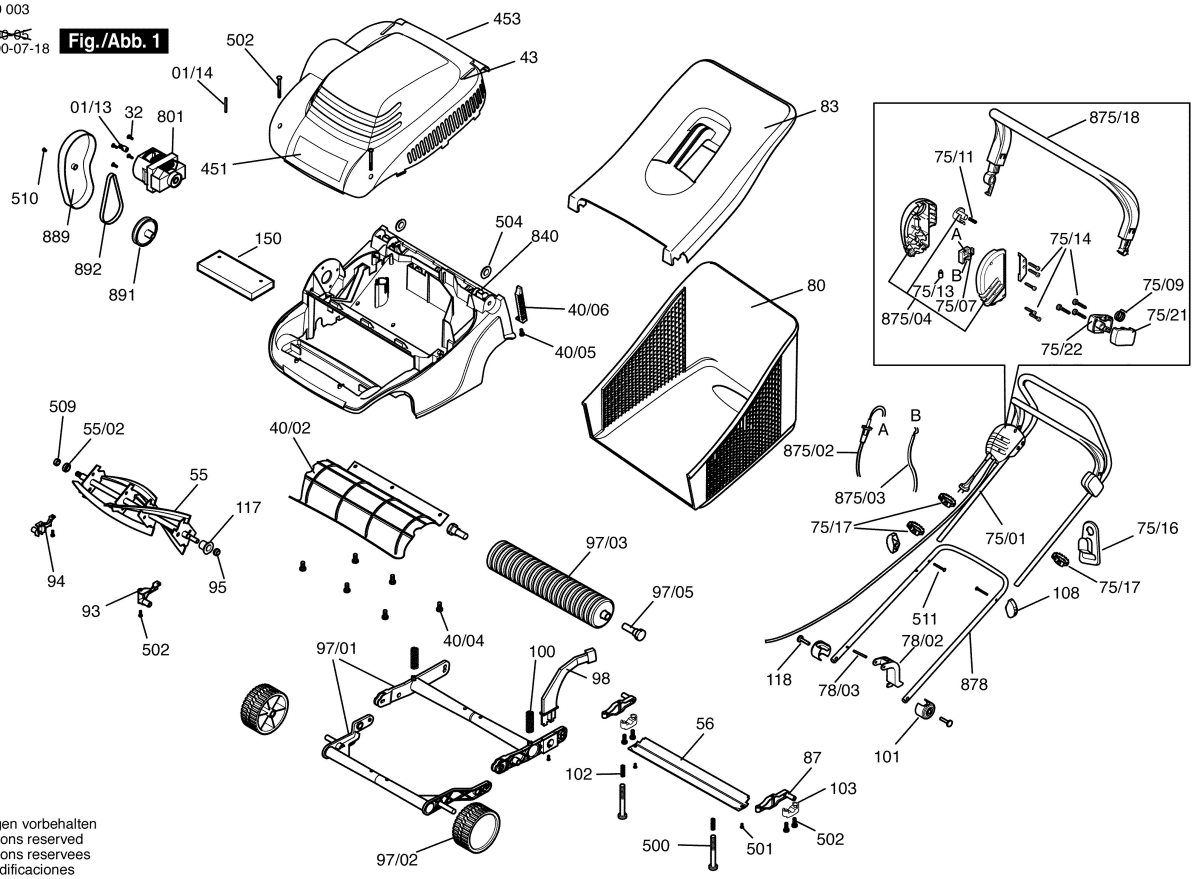

Änderungen vorbehalten
Modifications reserved
Modifications reservees
Salvo modificaciones