0 601 278 703
Issue / Stand 07-09-14
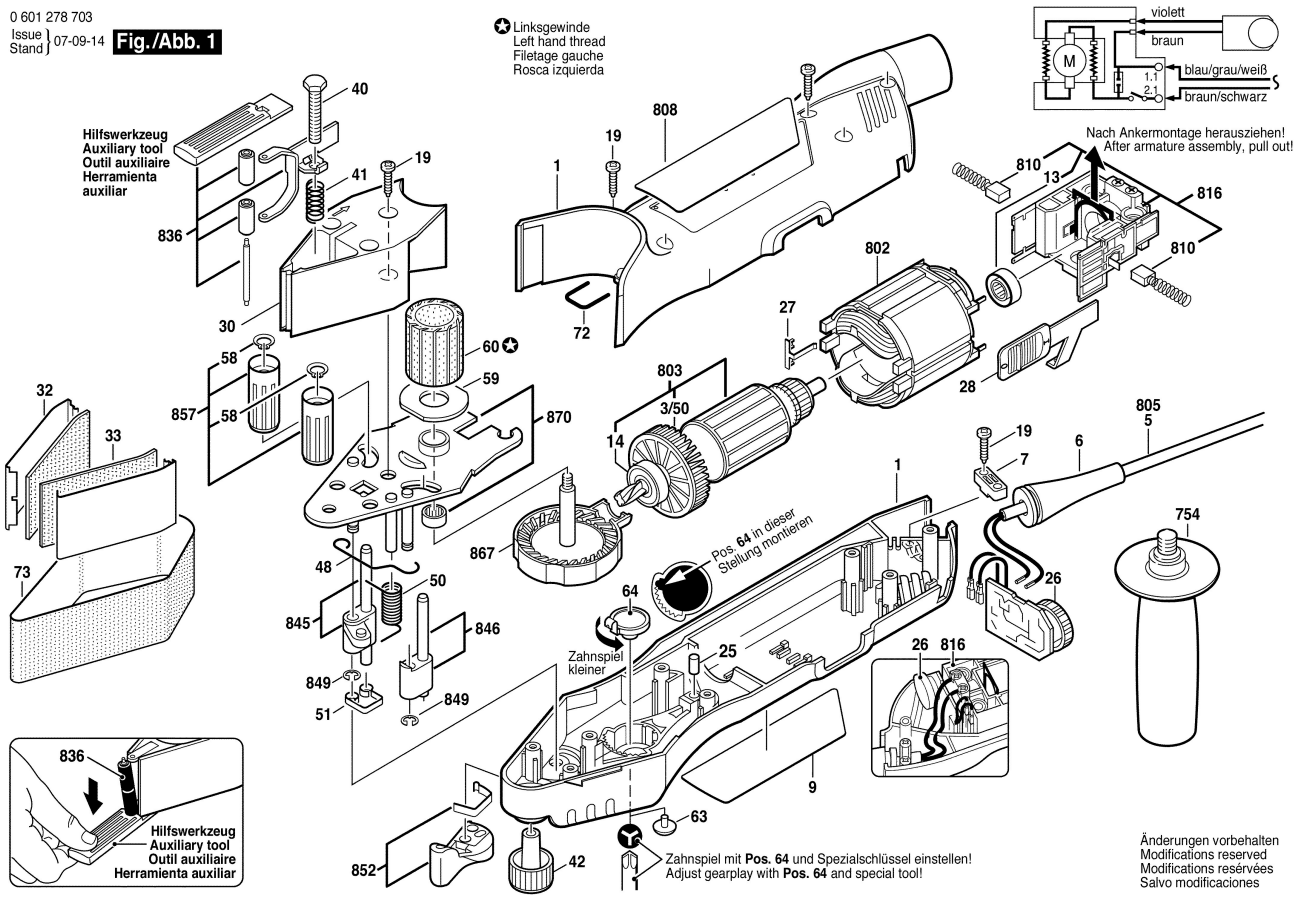
Fig./Abb. 1