0 601 340 039

Stand / Issue 82-12

Fig./Abb. 1

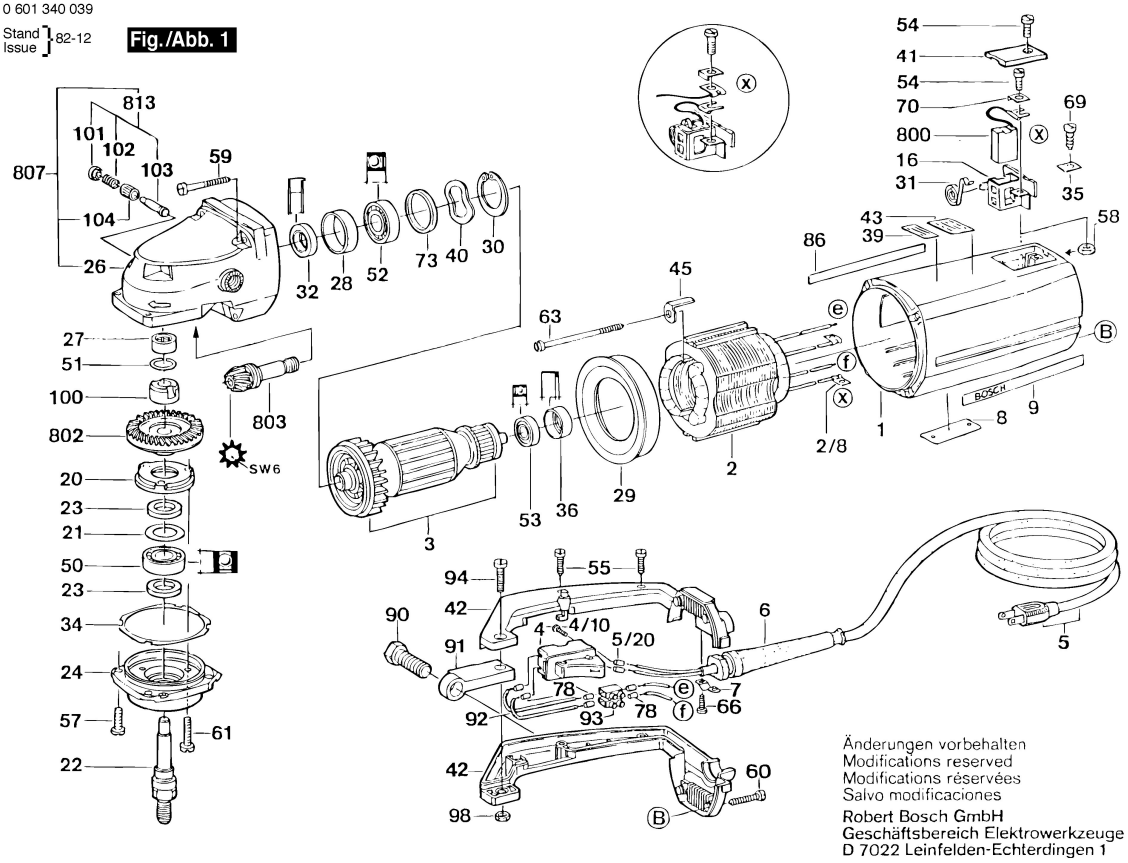

0 601 340 039

Stand / Issue 82-12
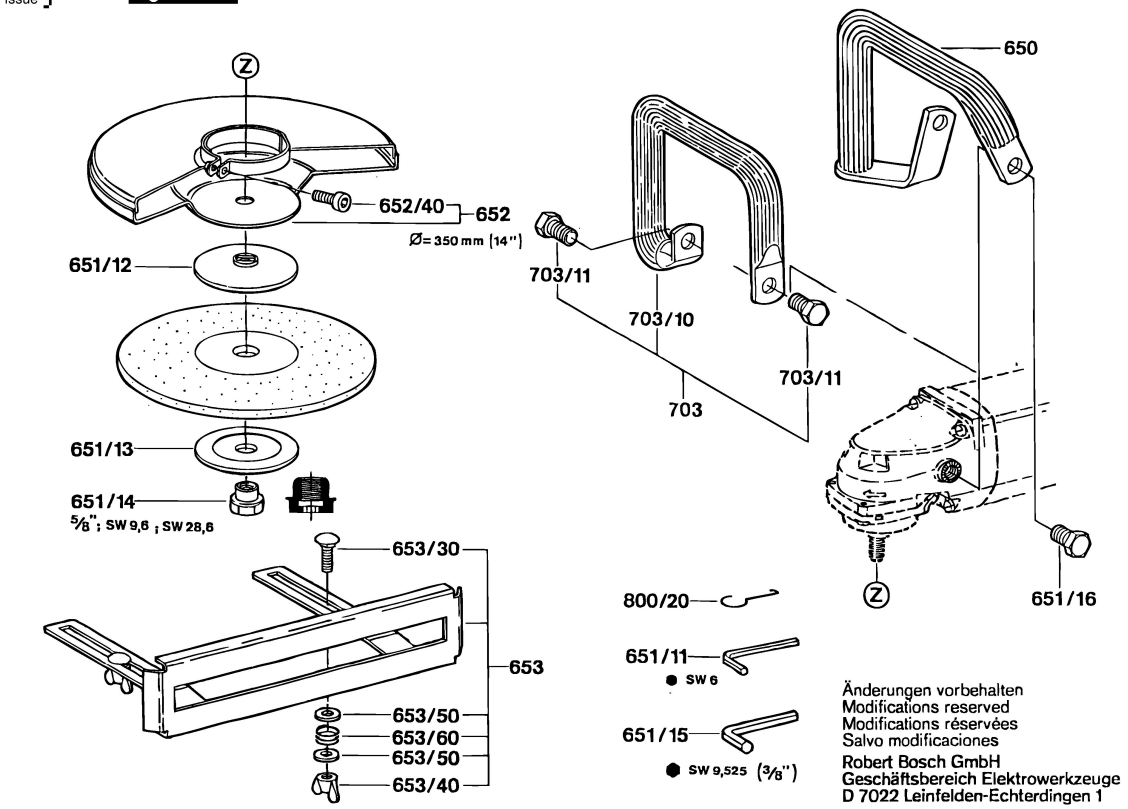
Fig./Abb. 2