0 601 357 103 / 803
Stand 98-07
Issue 02-04-25

Fig./Abb. 1

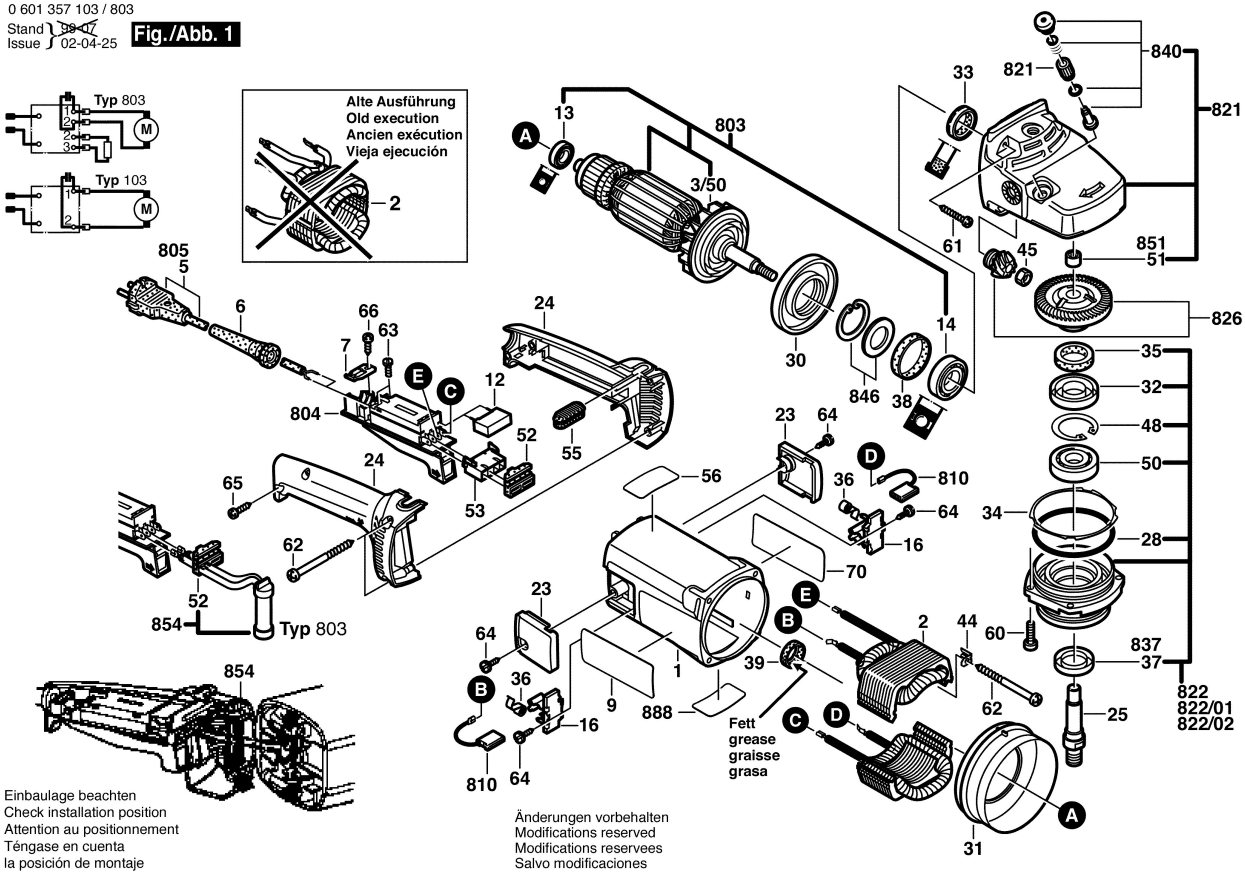

0 601 357 103 / 803
Stand 95-11
Issue 02-04-25

Fig./Abb. 2

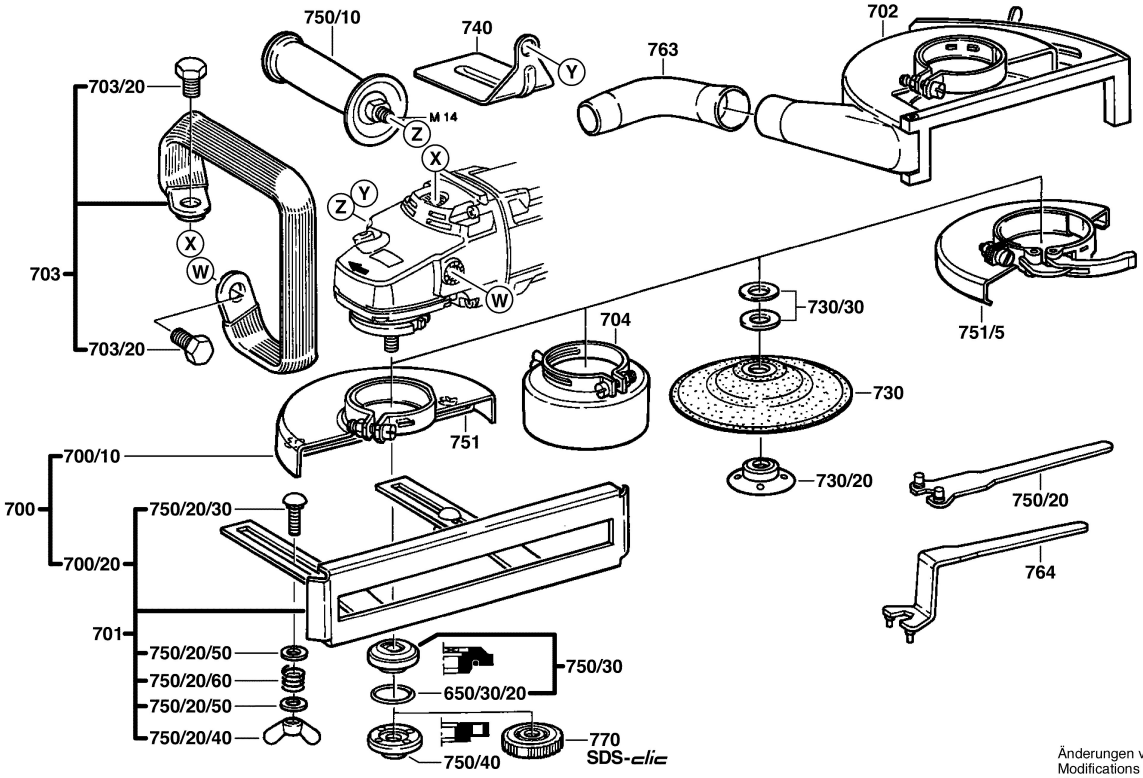

Änderungen vorbehalten
Modifications reserved
Modifications reservees
Salvo modificaciones