0 601 359 063
Stand ~~39-06~~
Issue 02-04-25
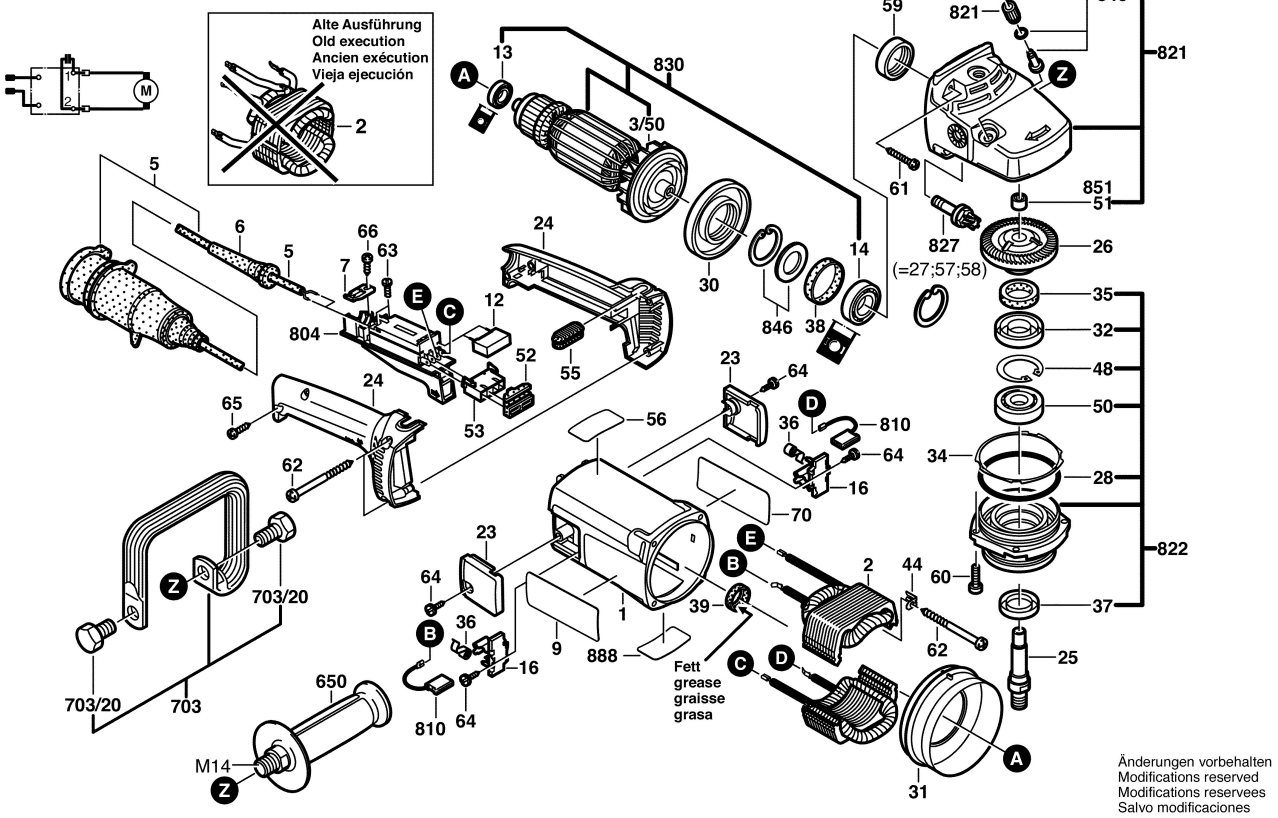
Fig./Abb. 1