0 601 529 103
Stand ~~97-10~~
Issue 01-01-30
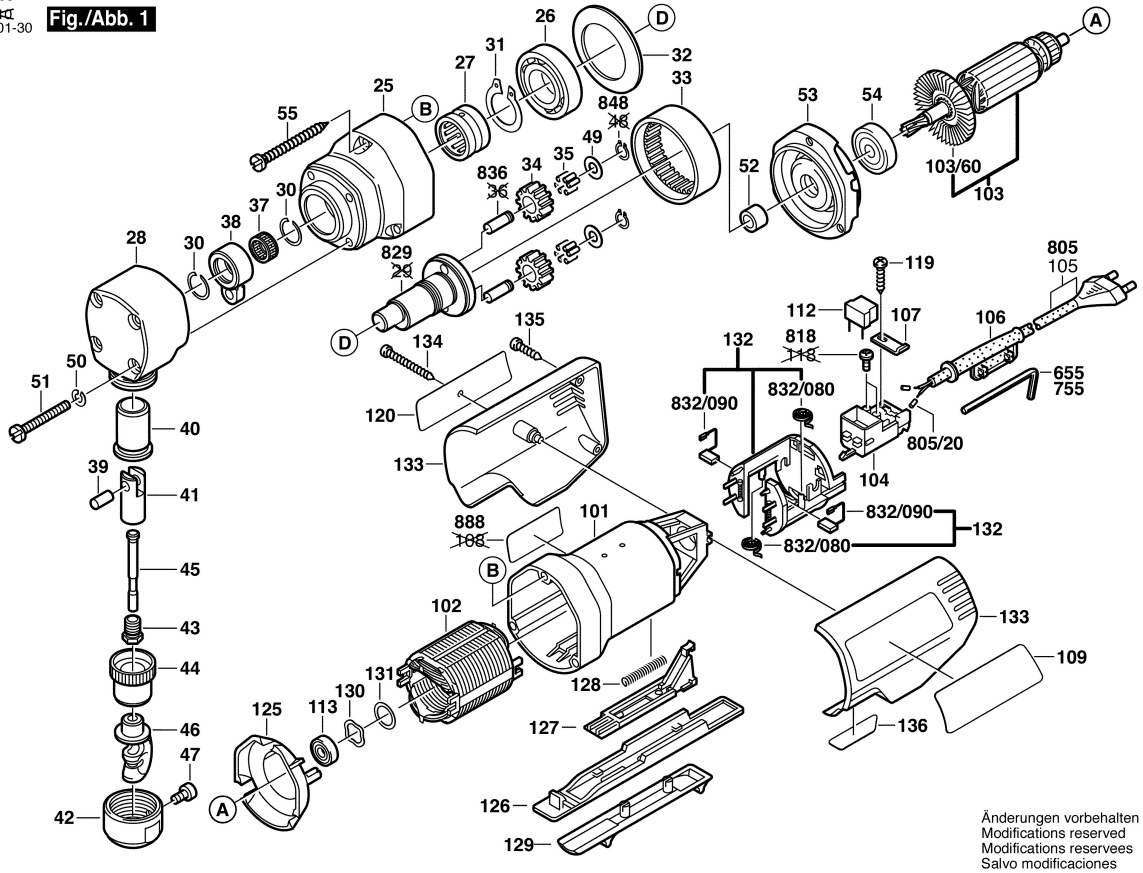
Fig./Abb. 1