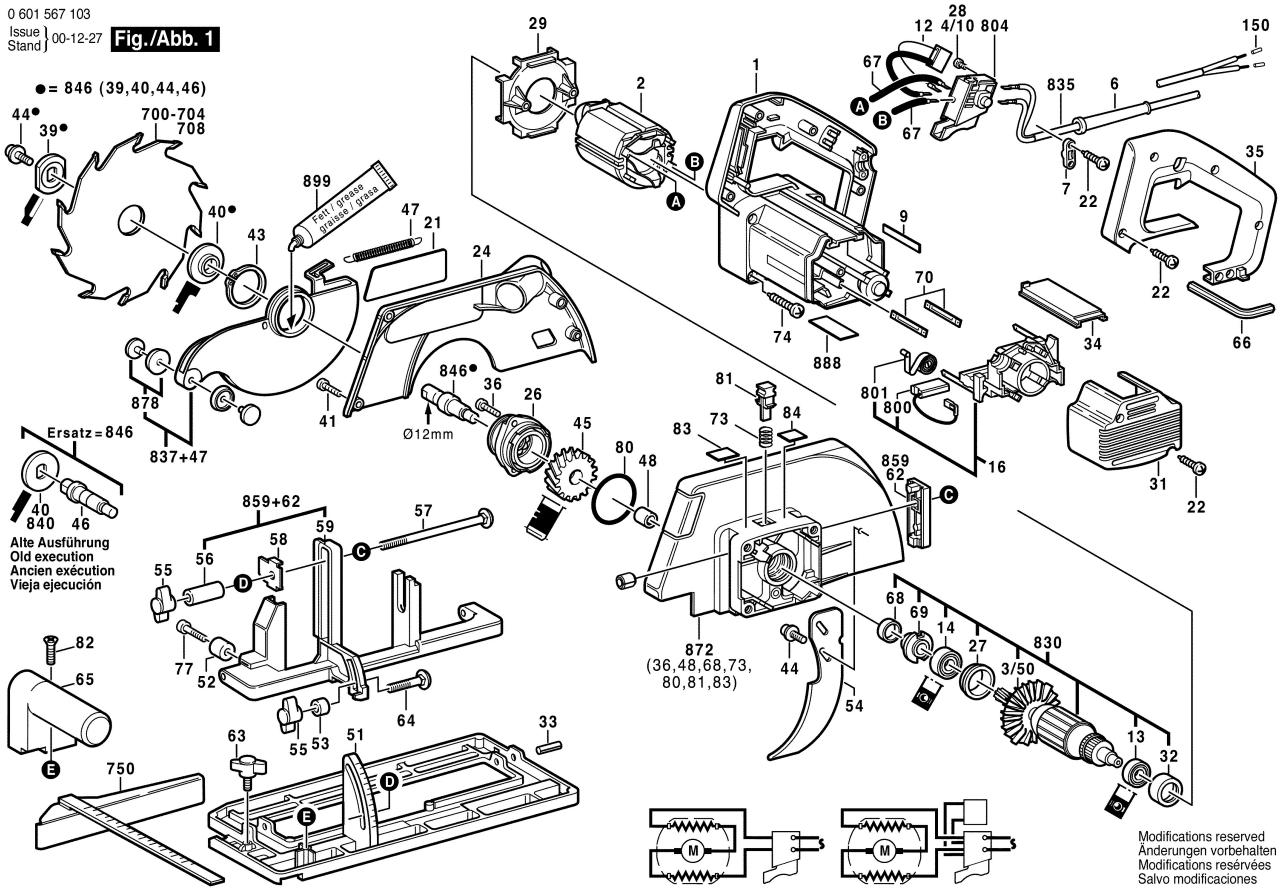0 601 567 103
Issue / Stand } 00-12-27 **Fig./Abb. 1**