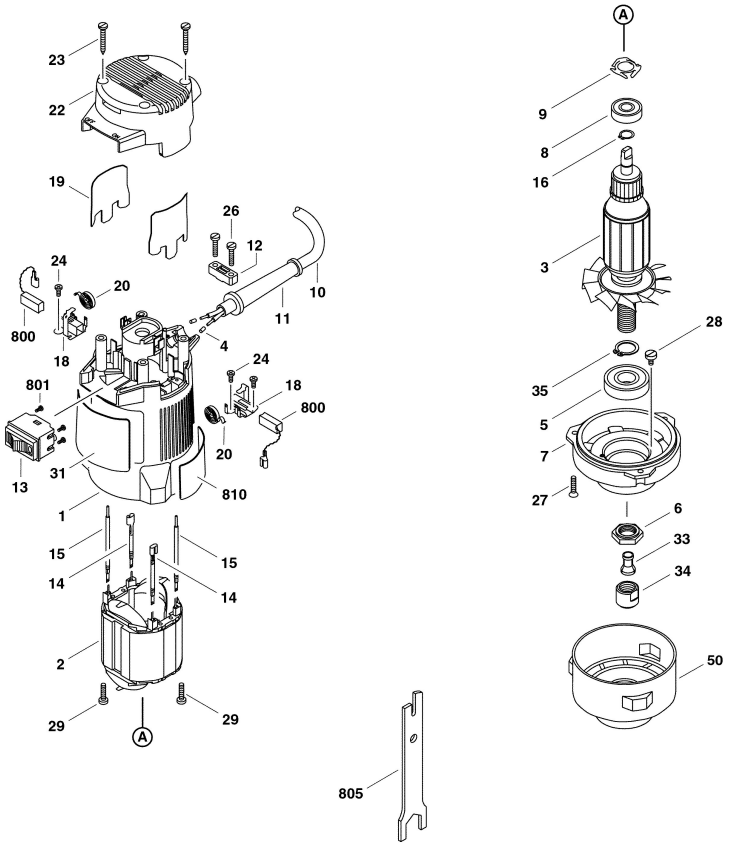0 601 608 5..
Issue
Stand } 99-12-21 **Fig./Abb. 1**