0 601 634 703

Stand / Issue 00-07-24
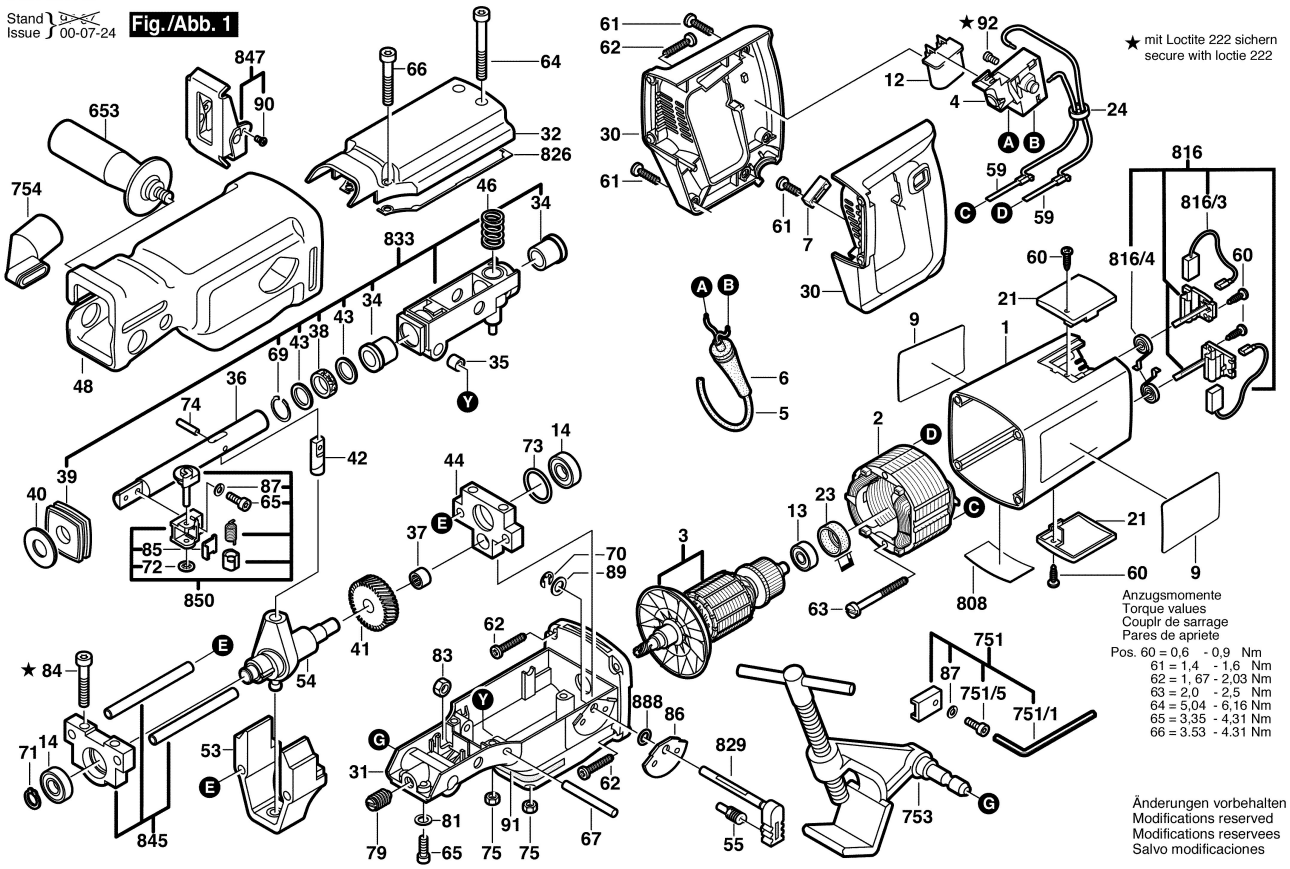
**Fig./Abb. 1**