0 601 755 078
Stand } 03-08
Issue } 13-05-29
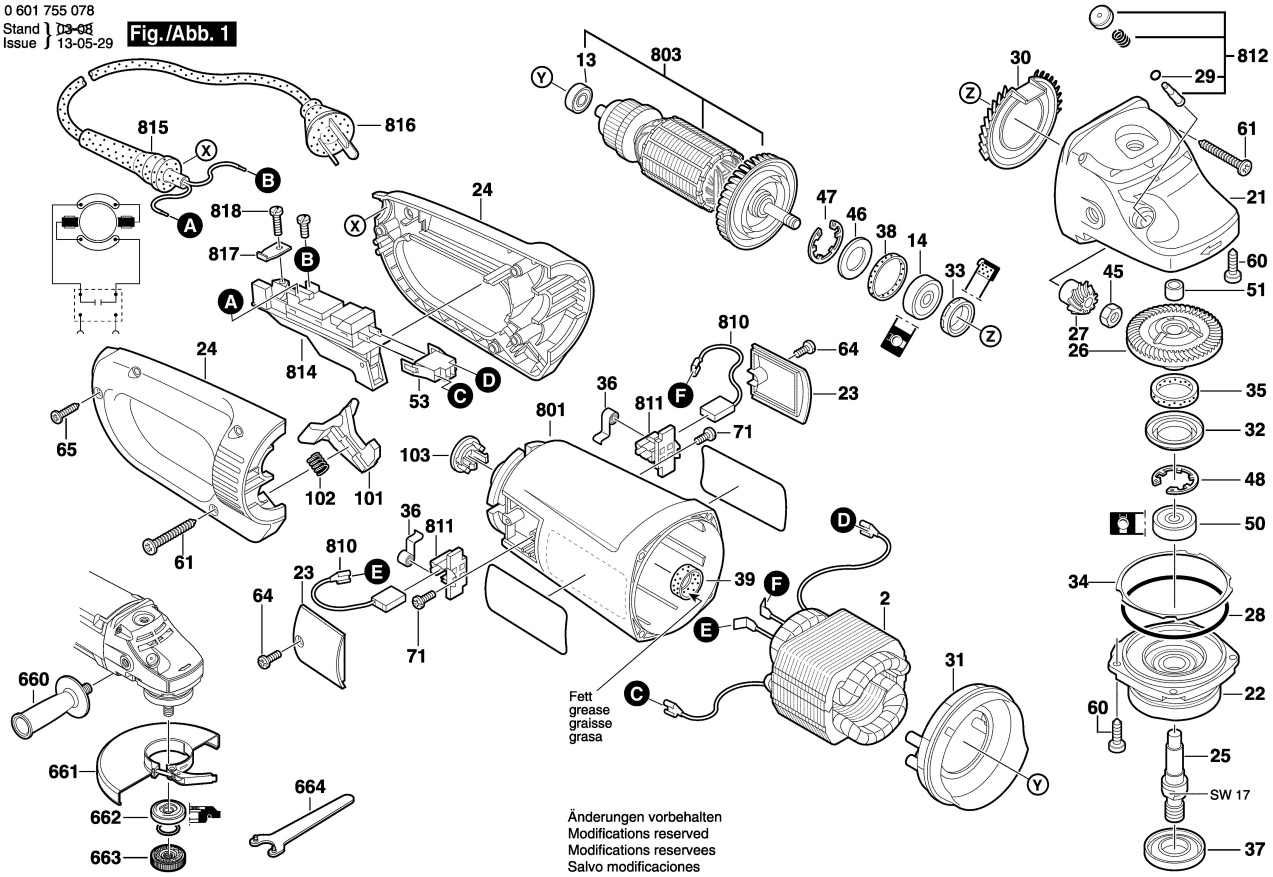
Fig./Abb. 1