0 601 913 220

Stand } ~~D1~~ 12
Issue } 05-03-23
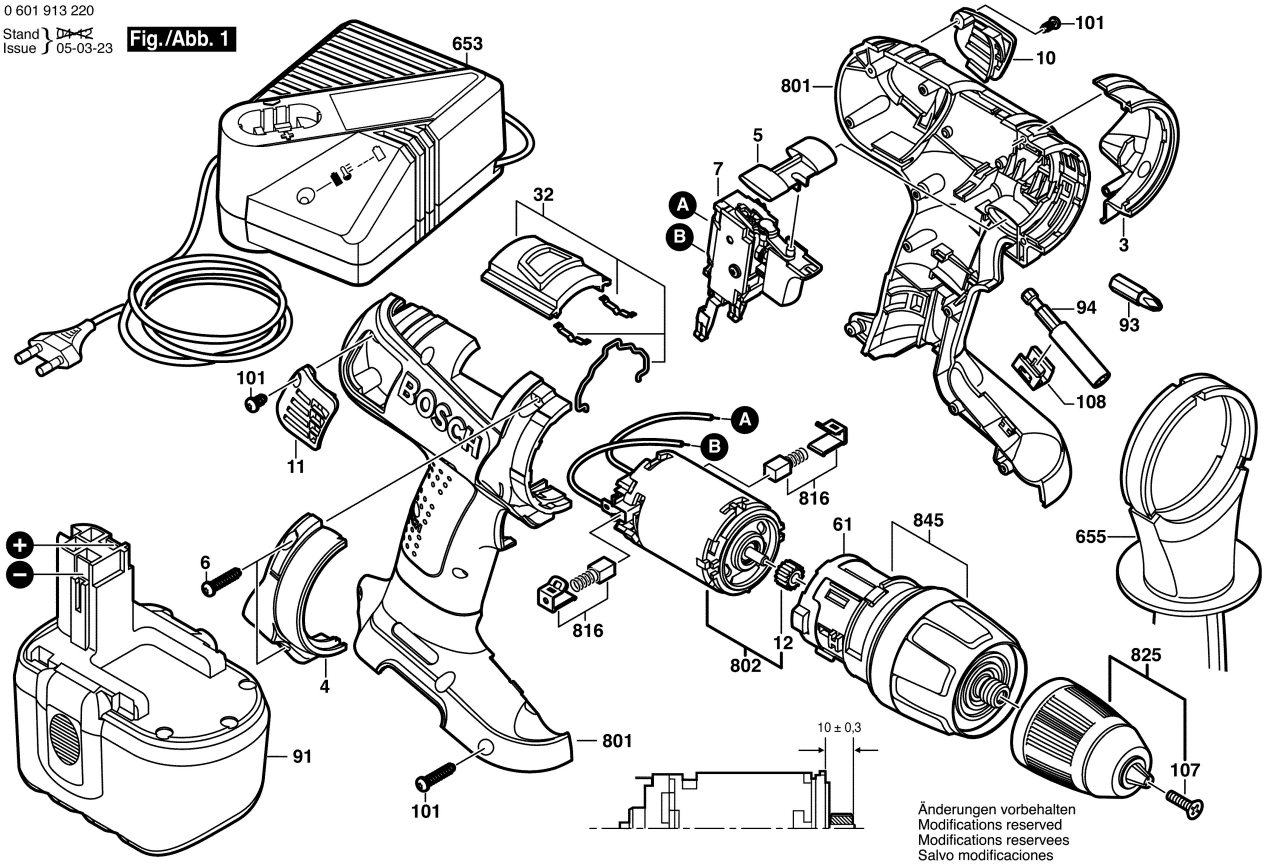
Fig./Abb. 1