0 603 166 503 / 570
Stand ~~99-11~~
Issue 99-01-25

Fig./Abb. 1

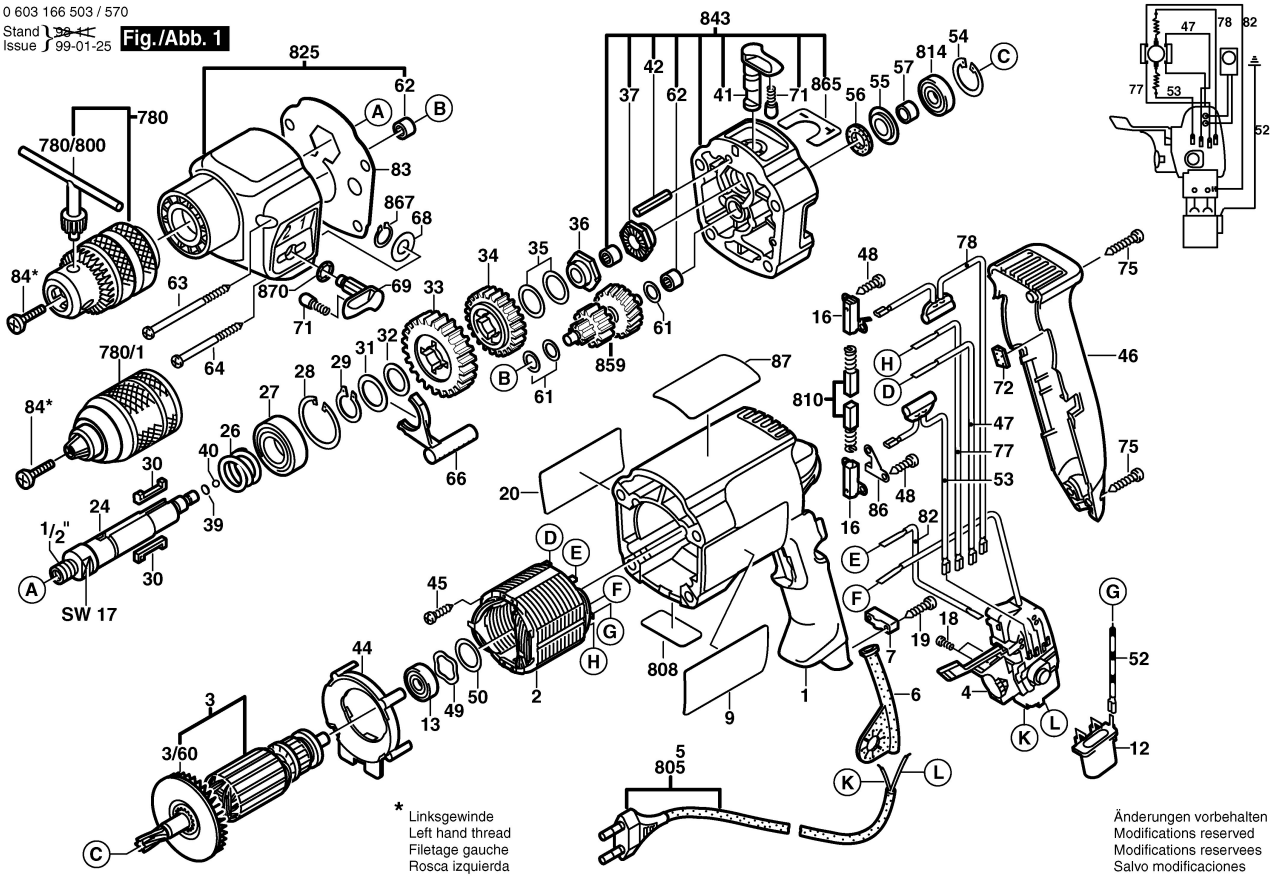

* Linksgewinde
Left hand thread
Filetage gauche
Rosca izquierda

0 603 166 503
Stand ~~98-04~~
Issue 98-11-12

Fig./Abb. 2

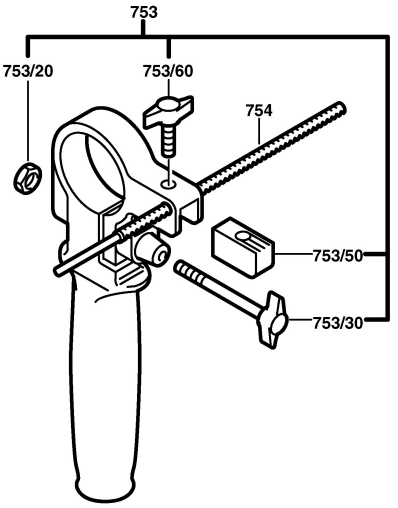

Änderungen vorbehalten
Modifications reserved
Modifications reservees
Salvo modificaciones