0 603 243 603
Issue / Stand } 08-04-17 **Fig./Abb. 1**

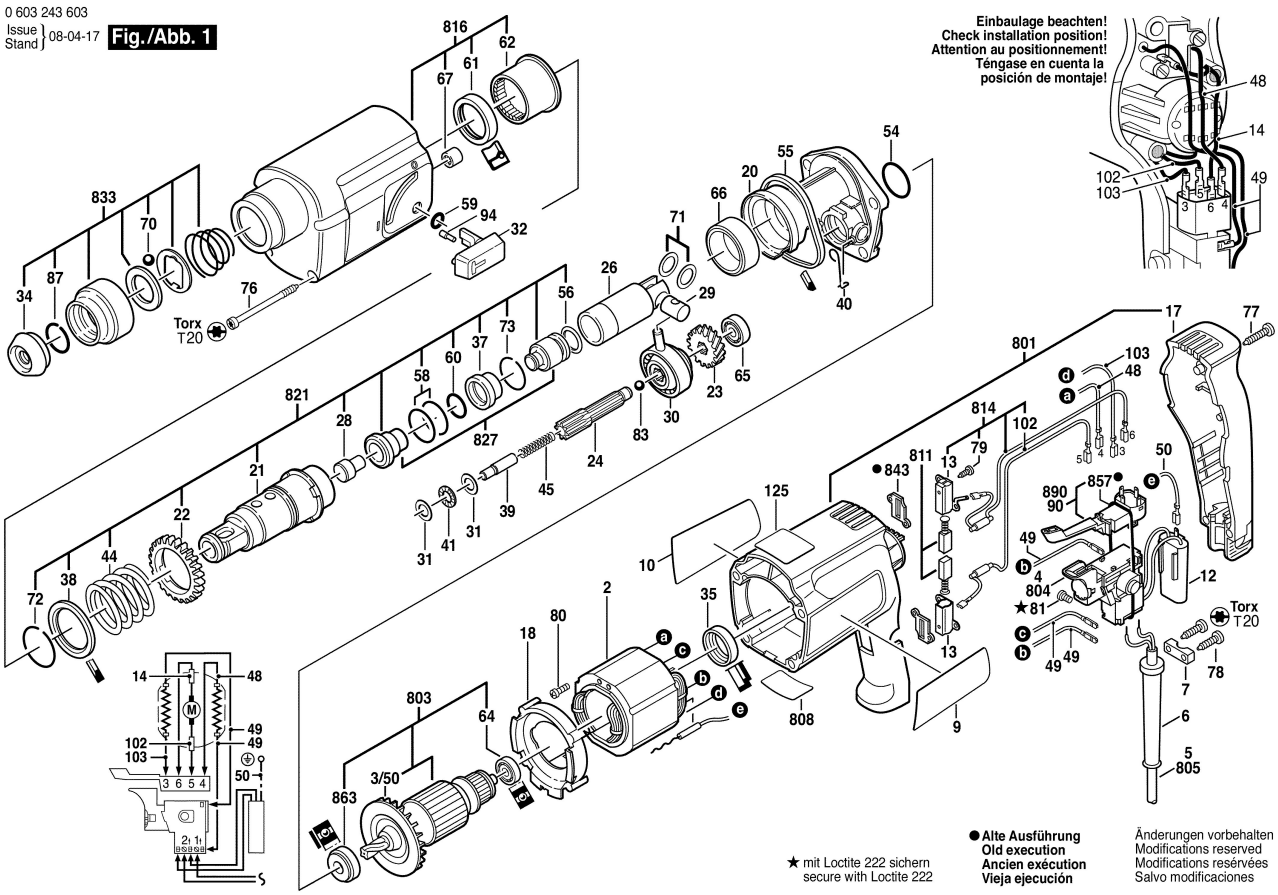
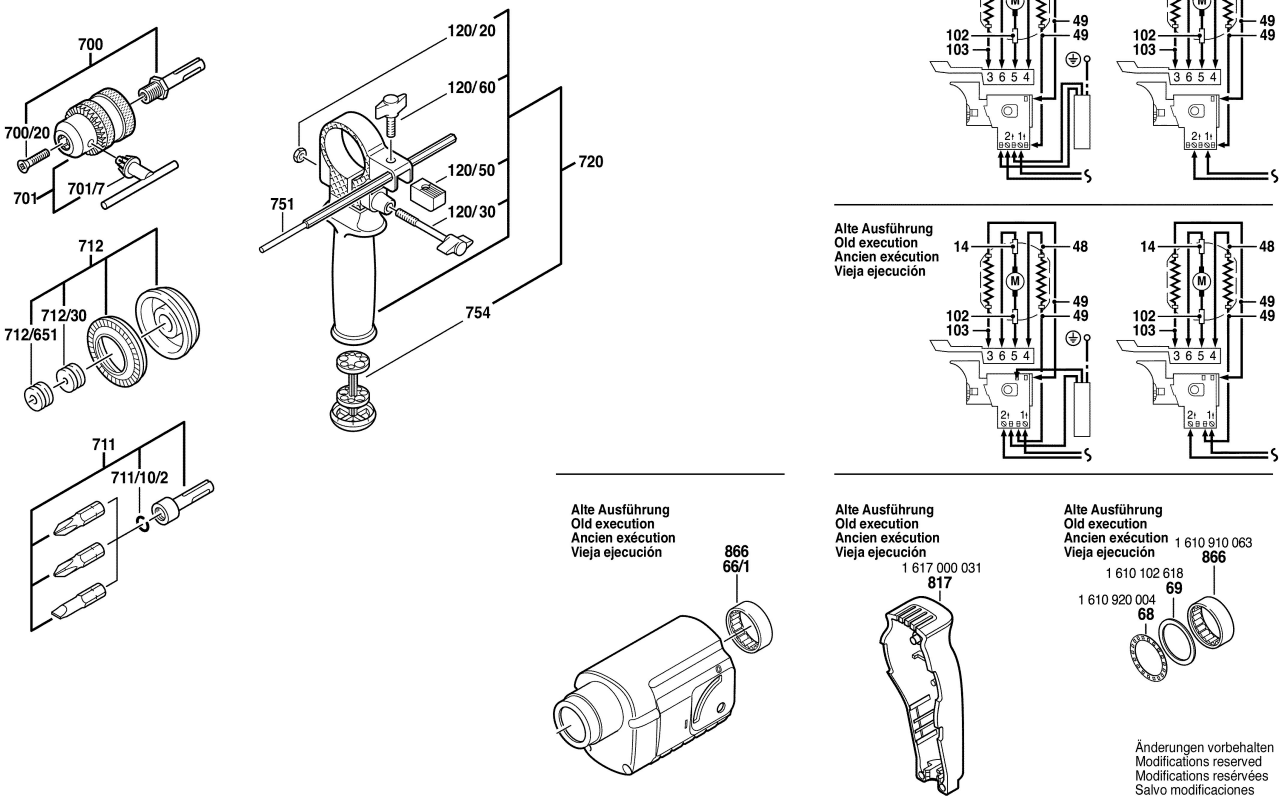
0 603 243 603
Issue / Stand } 08-04-17 **Fig./Abb. 2**