0 603 258 403

Stand } ~~98-01~~
Issue } 99-06-30
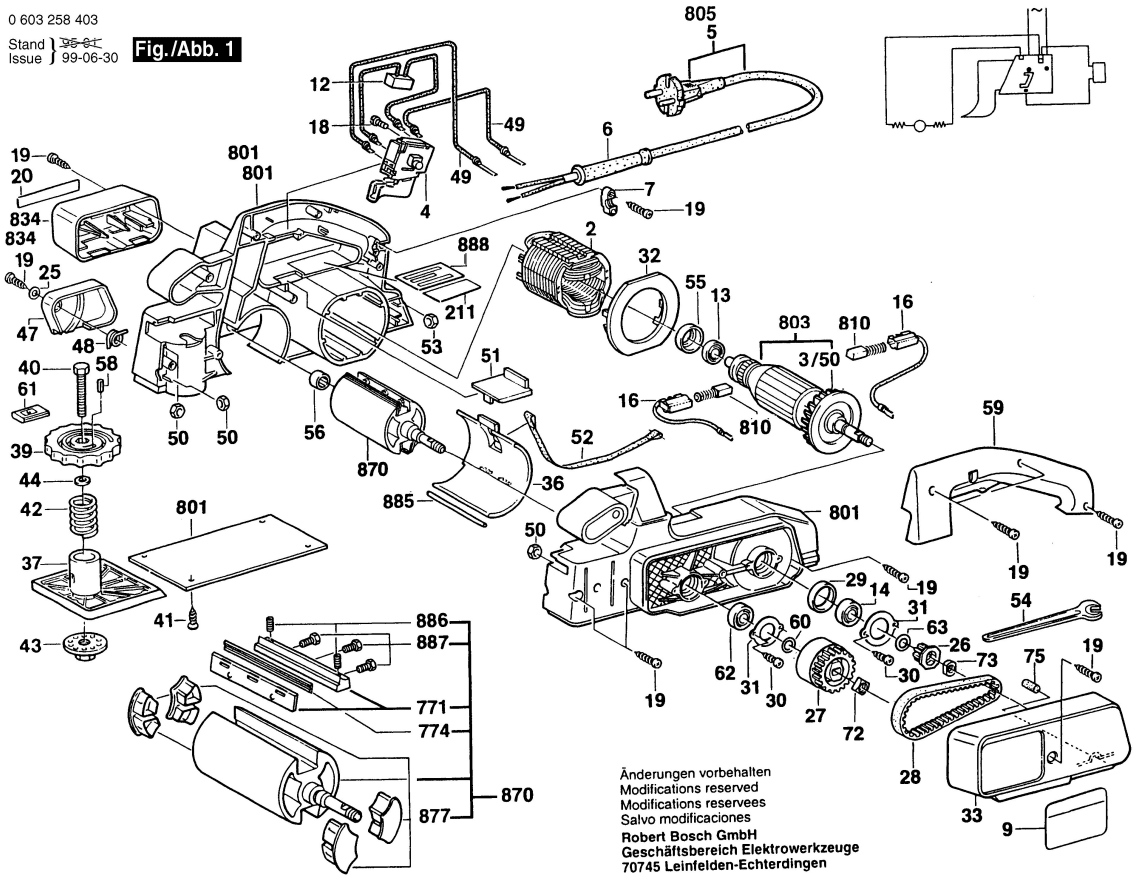
Fig./Abb. 1