0 603 308 003
Issue / Stand 06-10-31
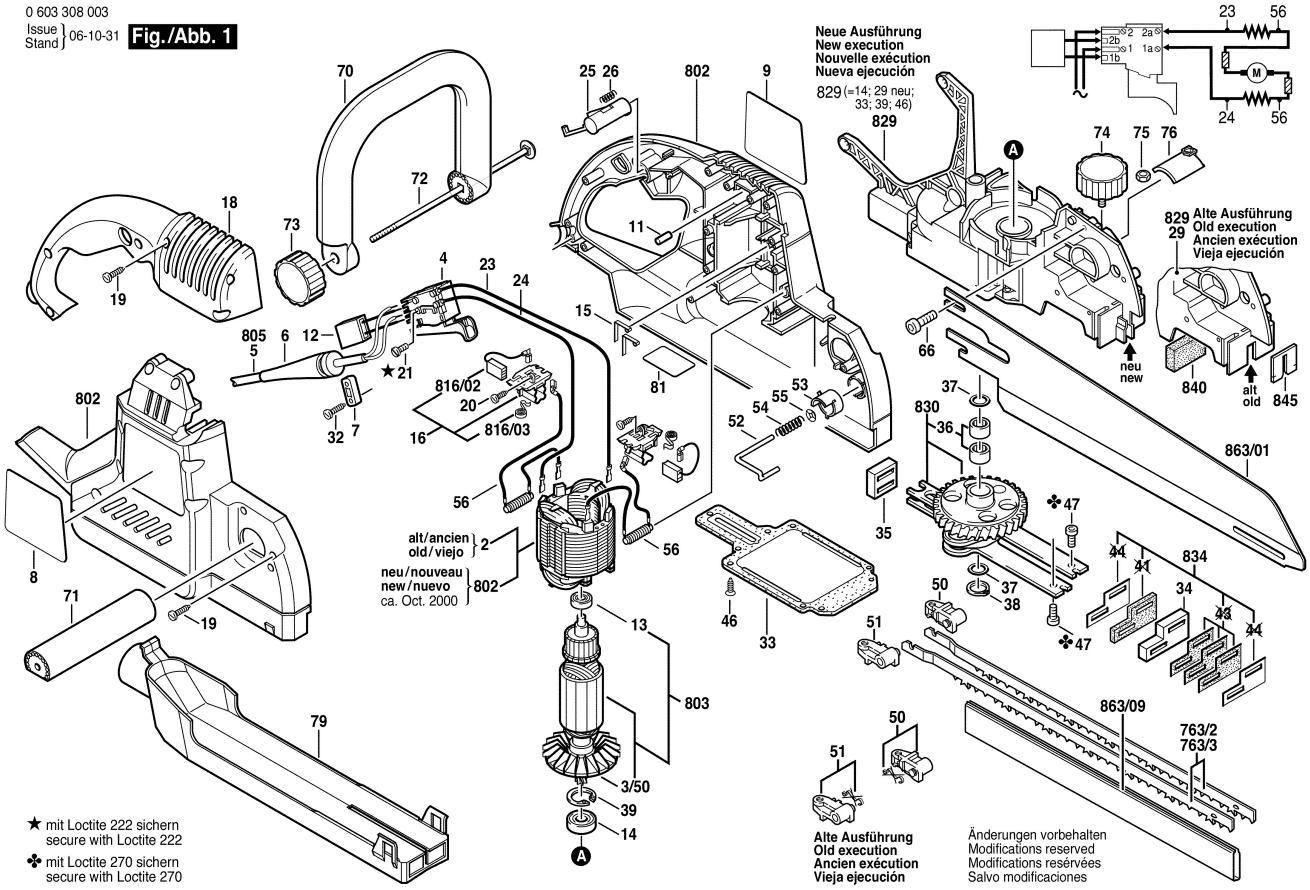
Fig./Abb. 1