0 603 310 103

Stand ~~01-08~~
Issue 07-11-09
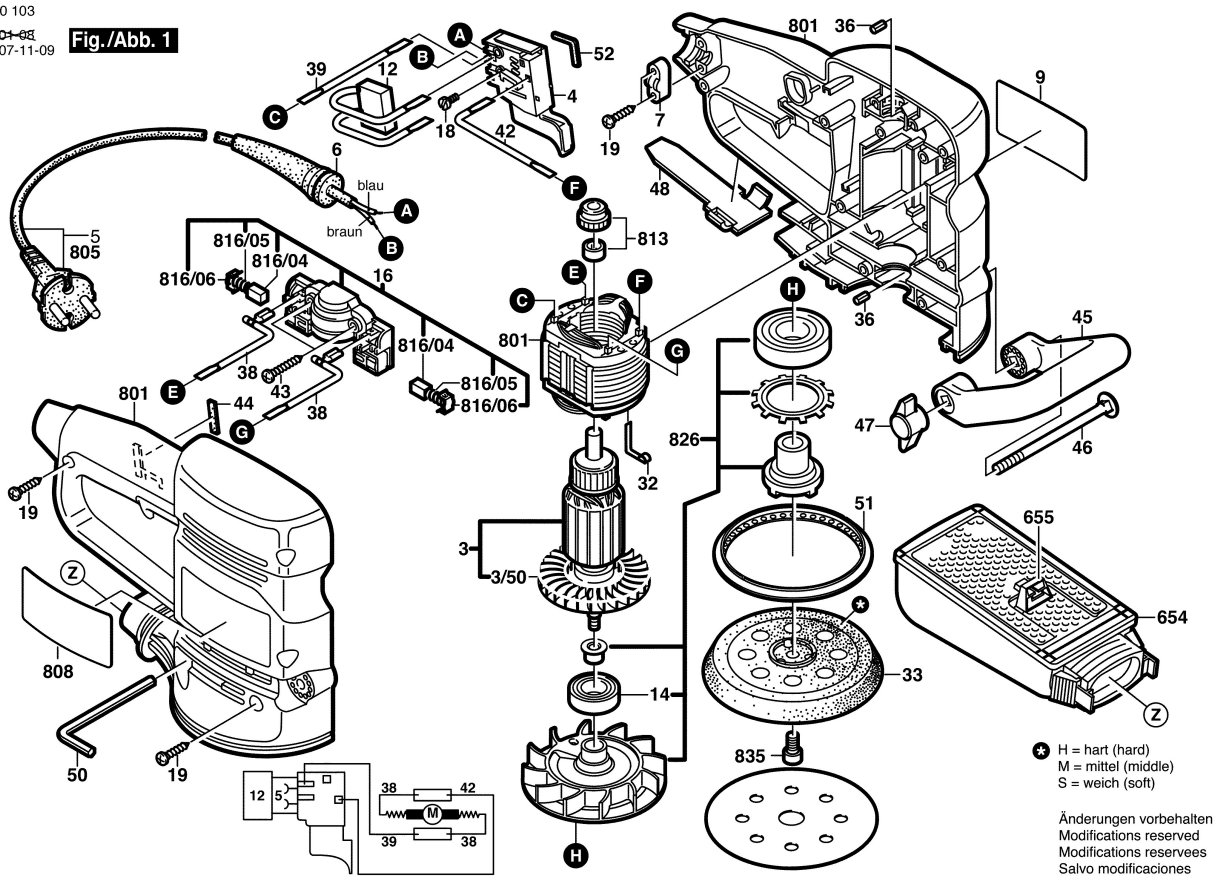
Fig./Abb. 1