0 603 363 703

Stand ~~08-05~~
Issue 01-08-02

Fig./Abb. 1

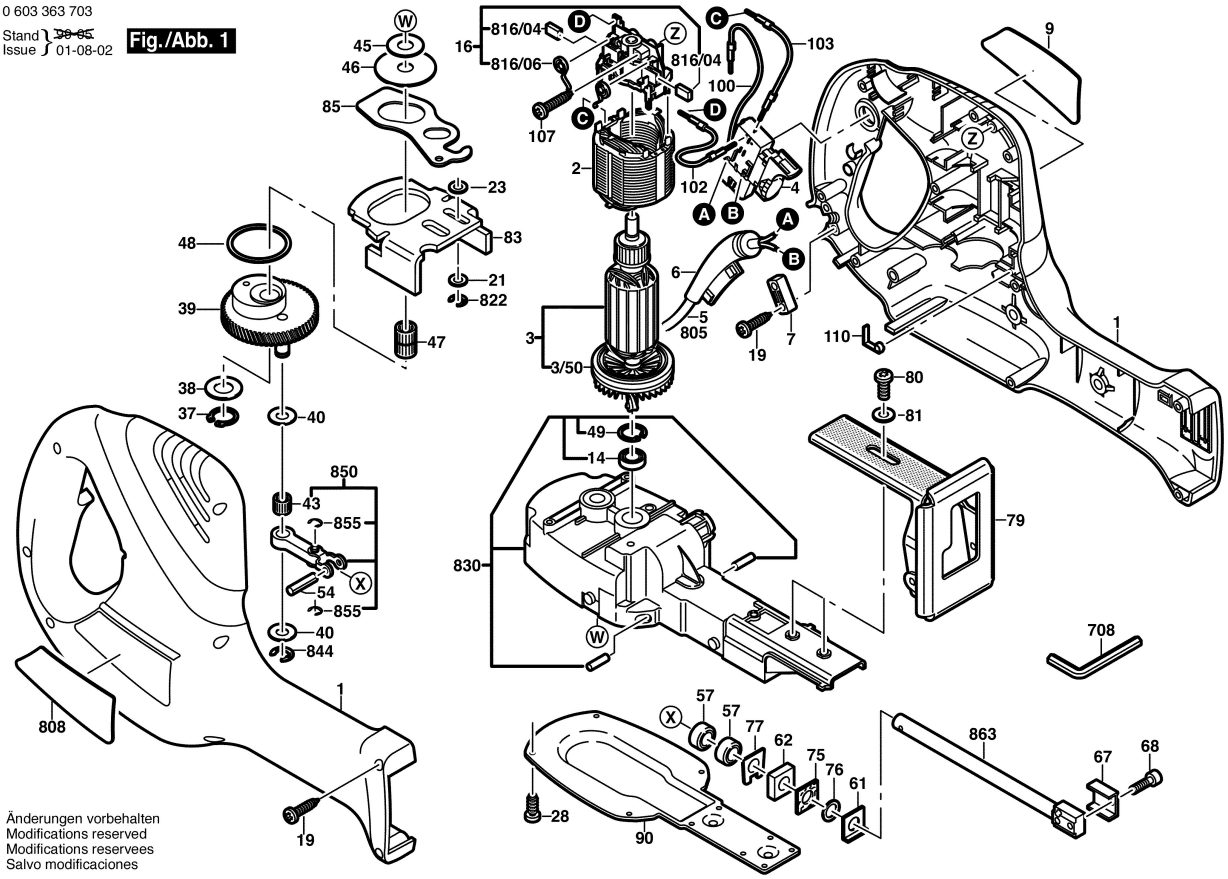

Änderungen vorbehalten
Modifications reserved
Modifications reservees
Salvo modificaciones