0 611 221 778
Issue / Stand 08-04-17

Fig./Abb. 1

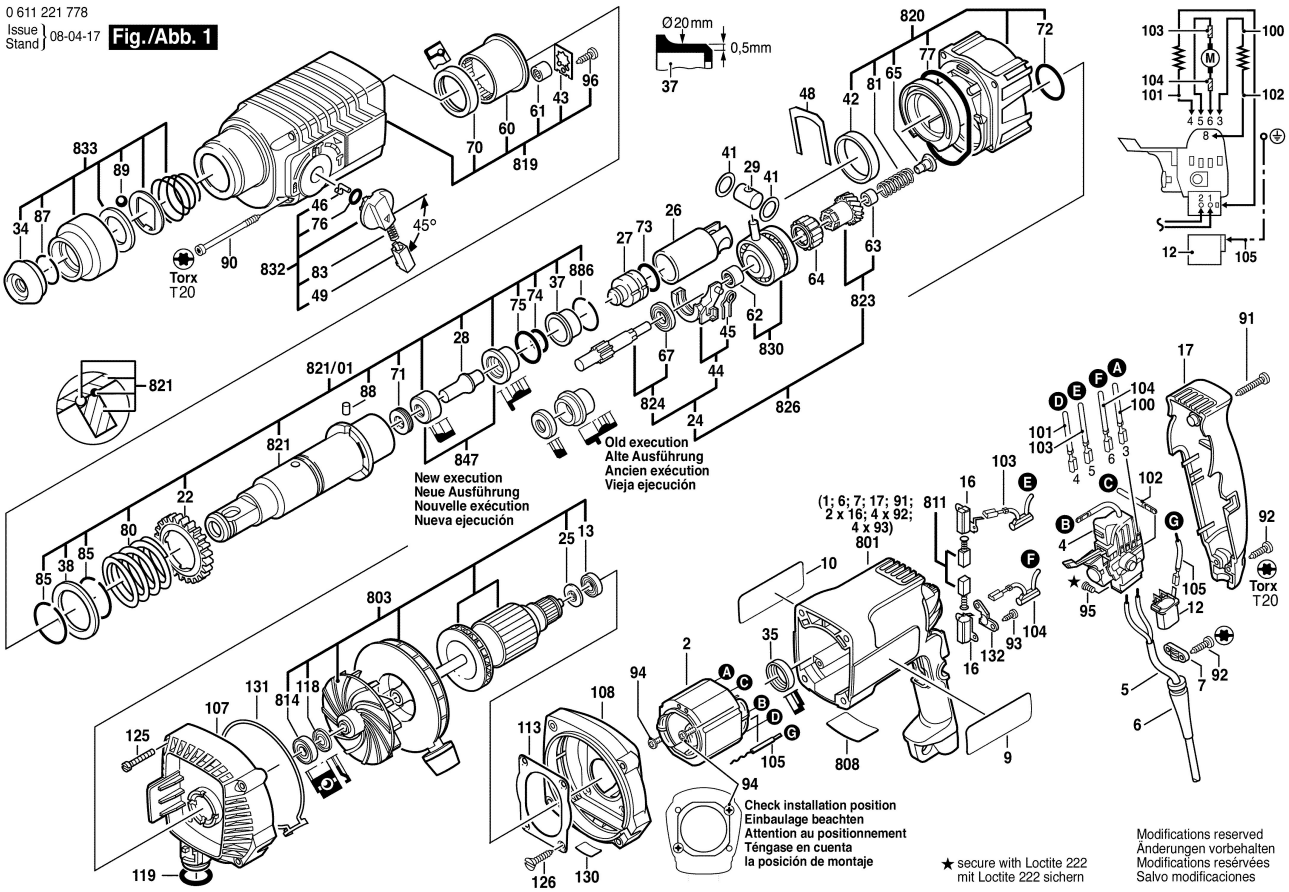

0 611 221 778
Issue / Stand 08-04-17
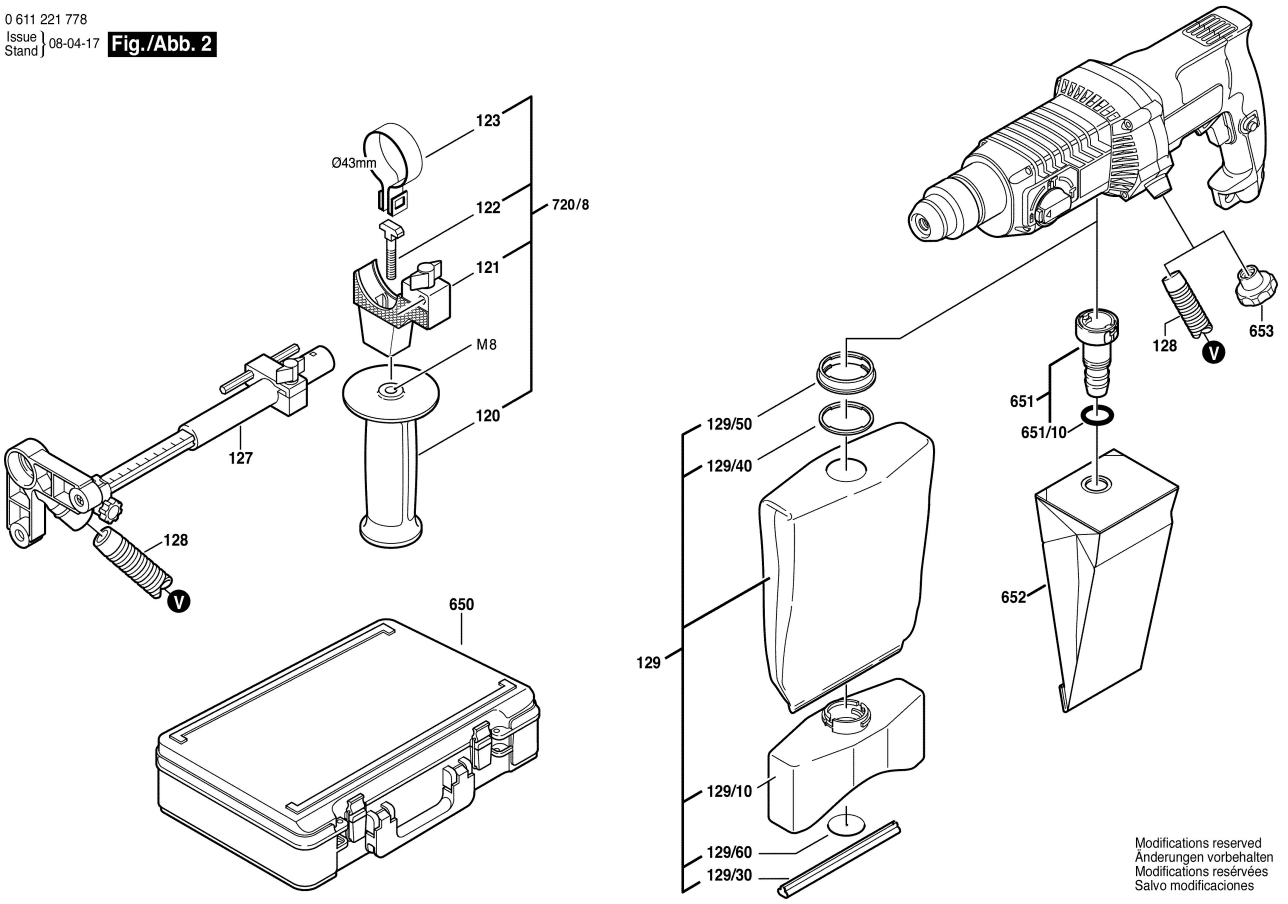
Fig./Abb. 2