3 600 H53 500

Stand ~~13-02-12~~
Issue 13-04-09

Fig. /Abb. 1

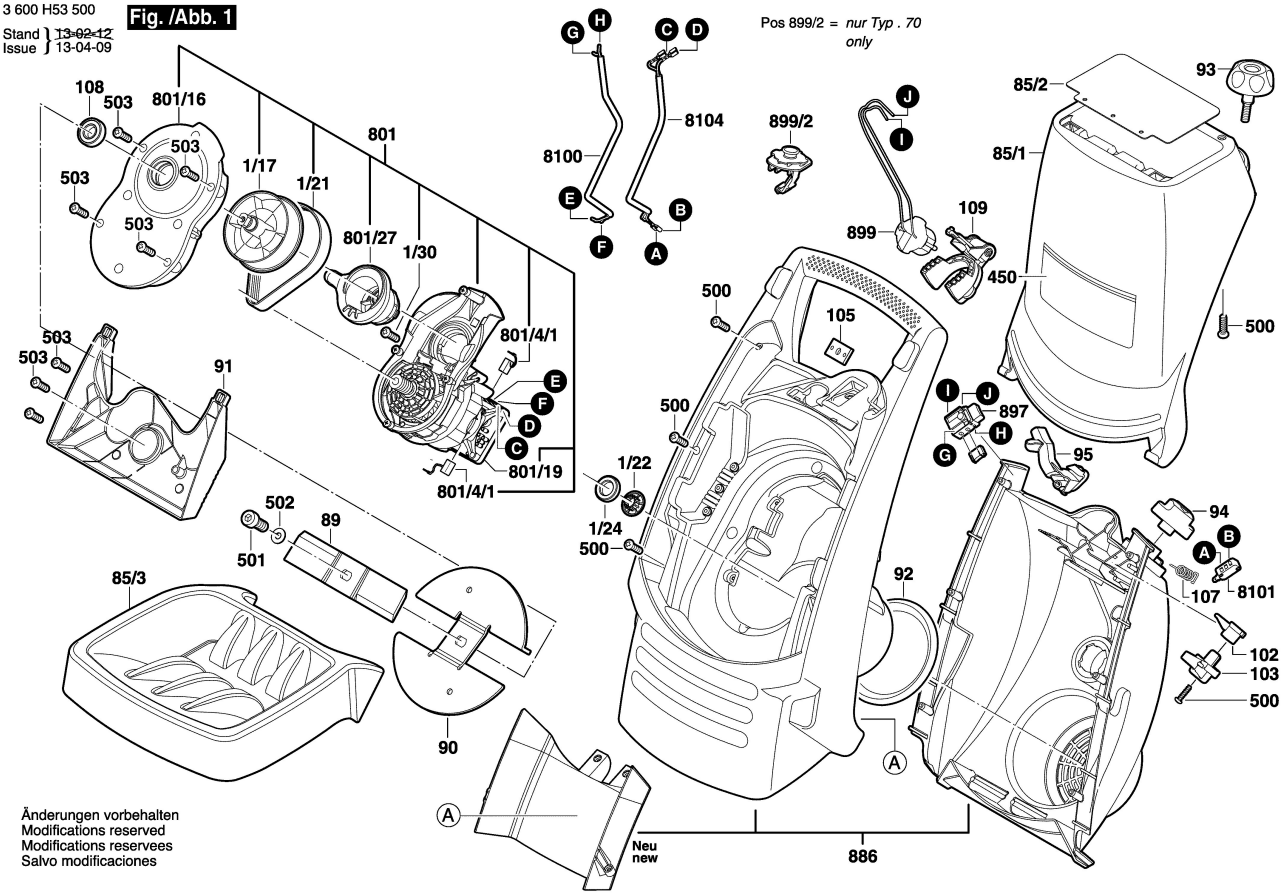

Änderungen vorbehalten
Modifications reserved
Modifications reservees
Salvo modificaciones

3 600 H53 500

Stand
Issue 07-02-08

Fig./Abb. 2

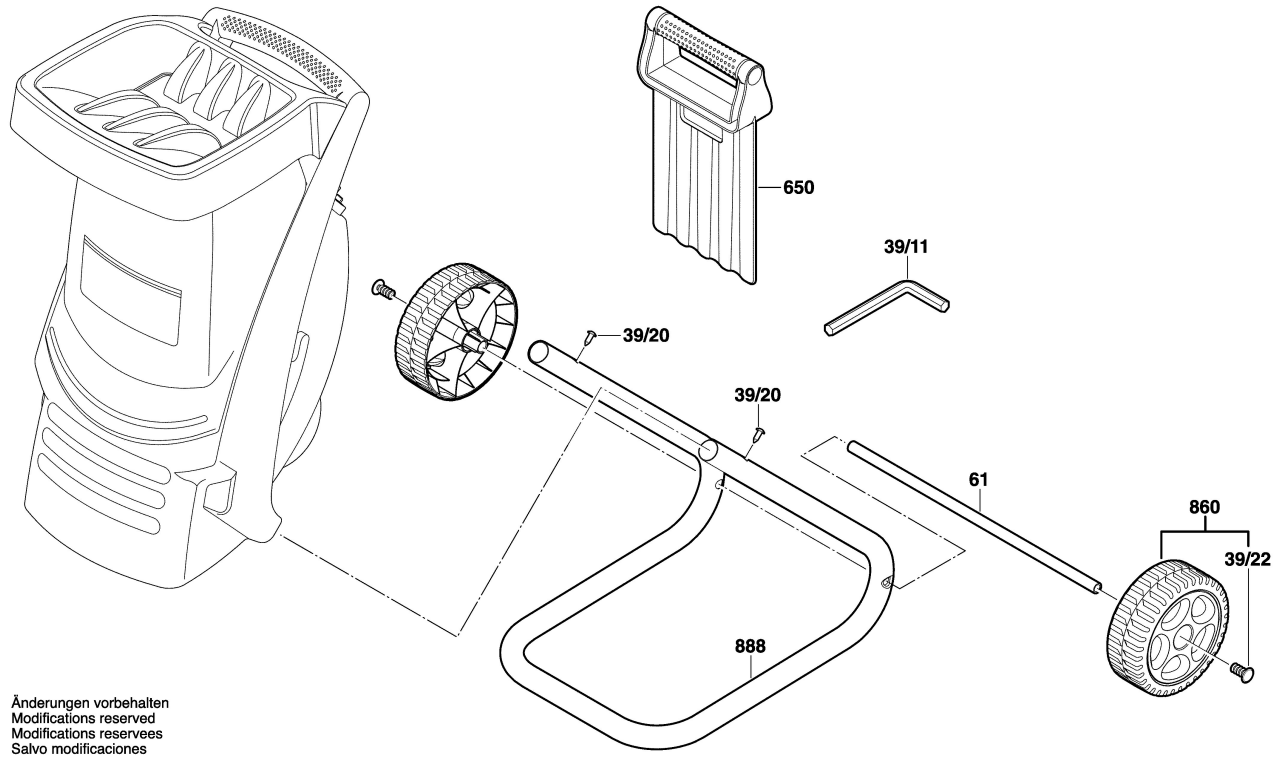

Änderungen vorbehalten
Modifications reserved
Modifications reservees
Salvo modificaciones