3 600 H81 302

Stand ~~12-12-19~~
Issue 13-01-16

Fig./Abb. 1

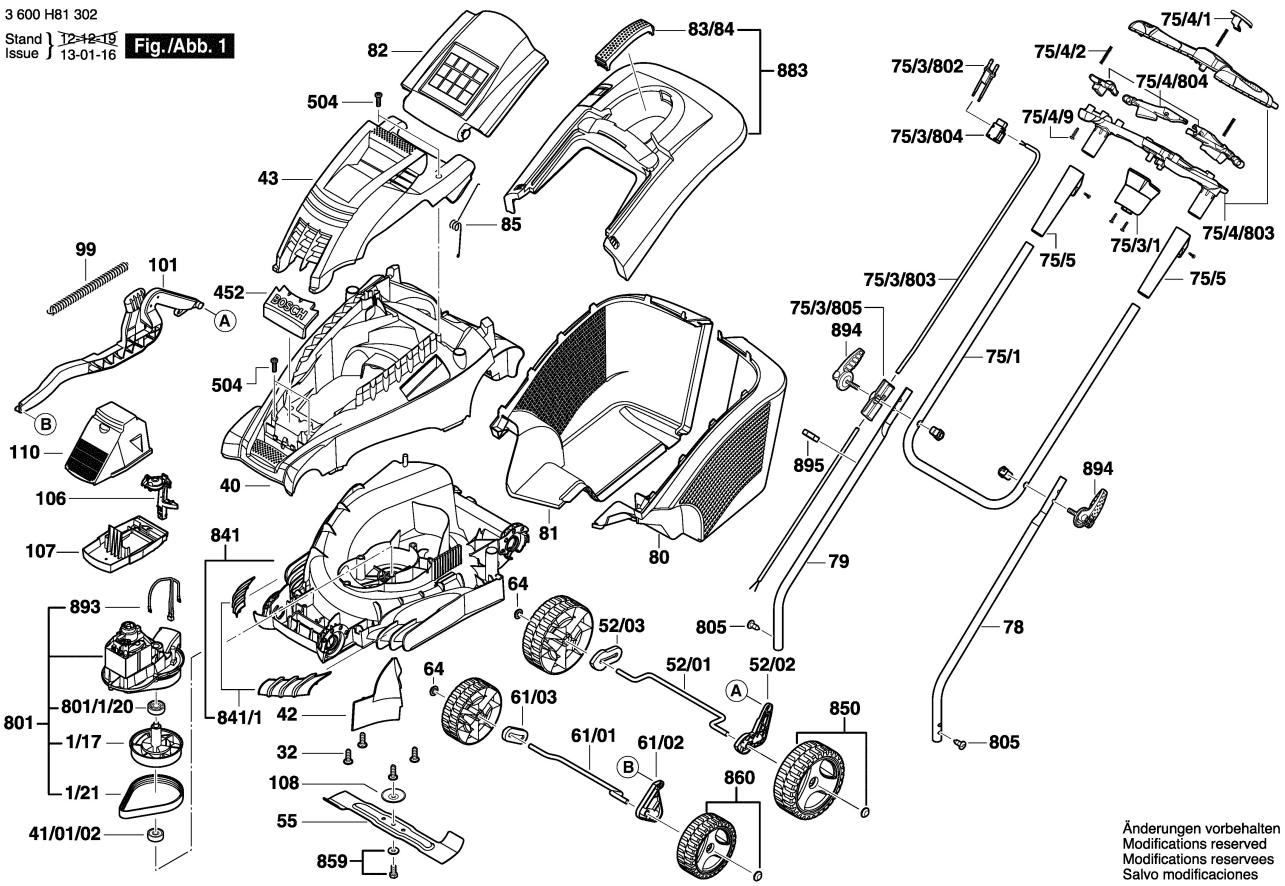

Änderungen vorbehalten
Modifications reserved
Modifications reservees
Salvo modificaciones