3 600 H81 770

Stand ~~12-08-29~~
Issue 12-08-31

Fig./Abb. 1

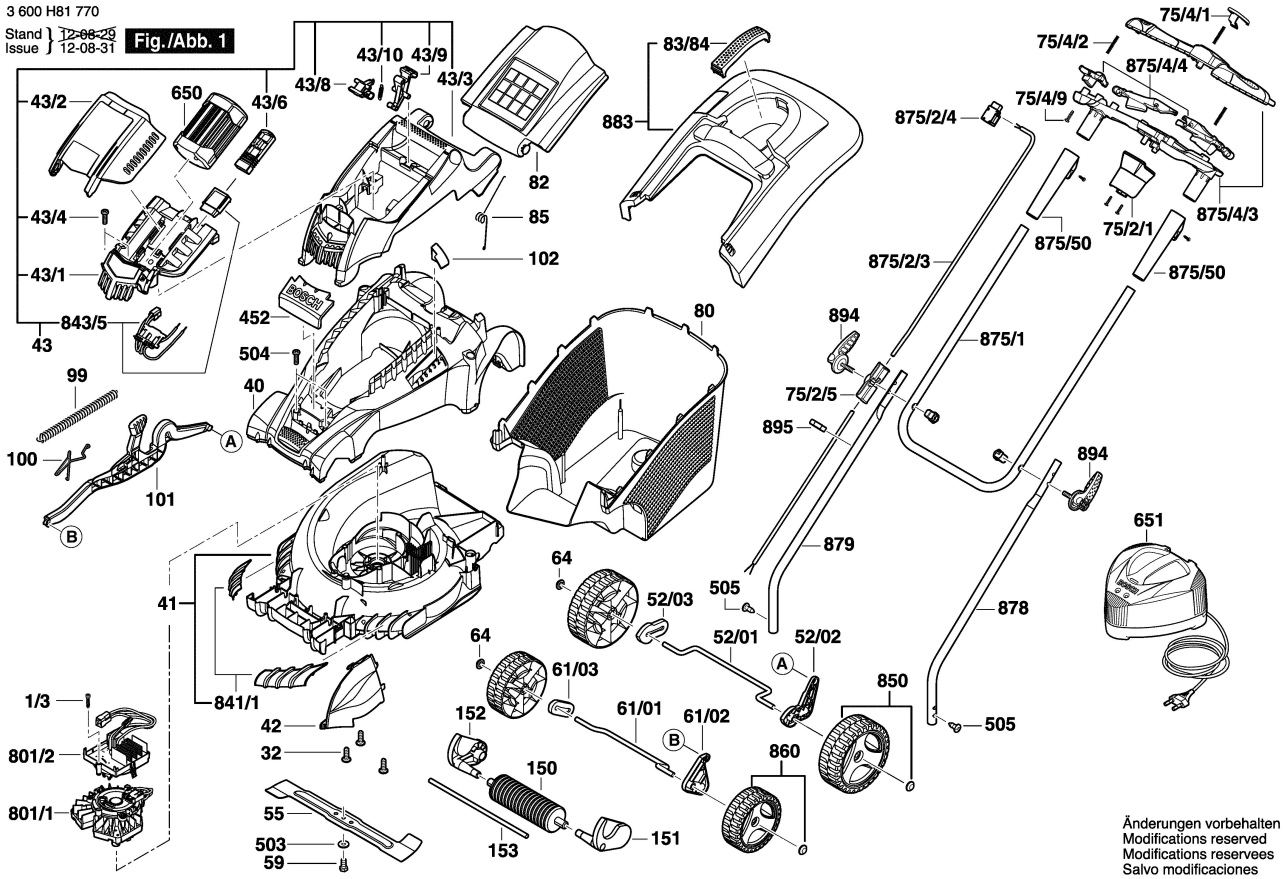

Änderungen vorbehalten
Modifications reserved
Modifications reservees
Salvo modificaciones