3 600 H81 F70

Stand ~~07-01~~
Issue 08-04-30

Fig./Abb. 1

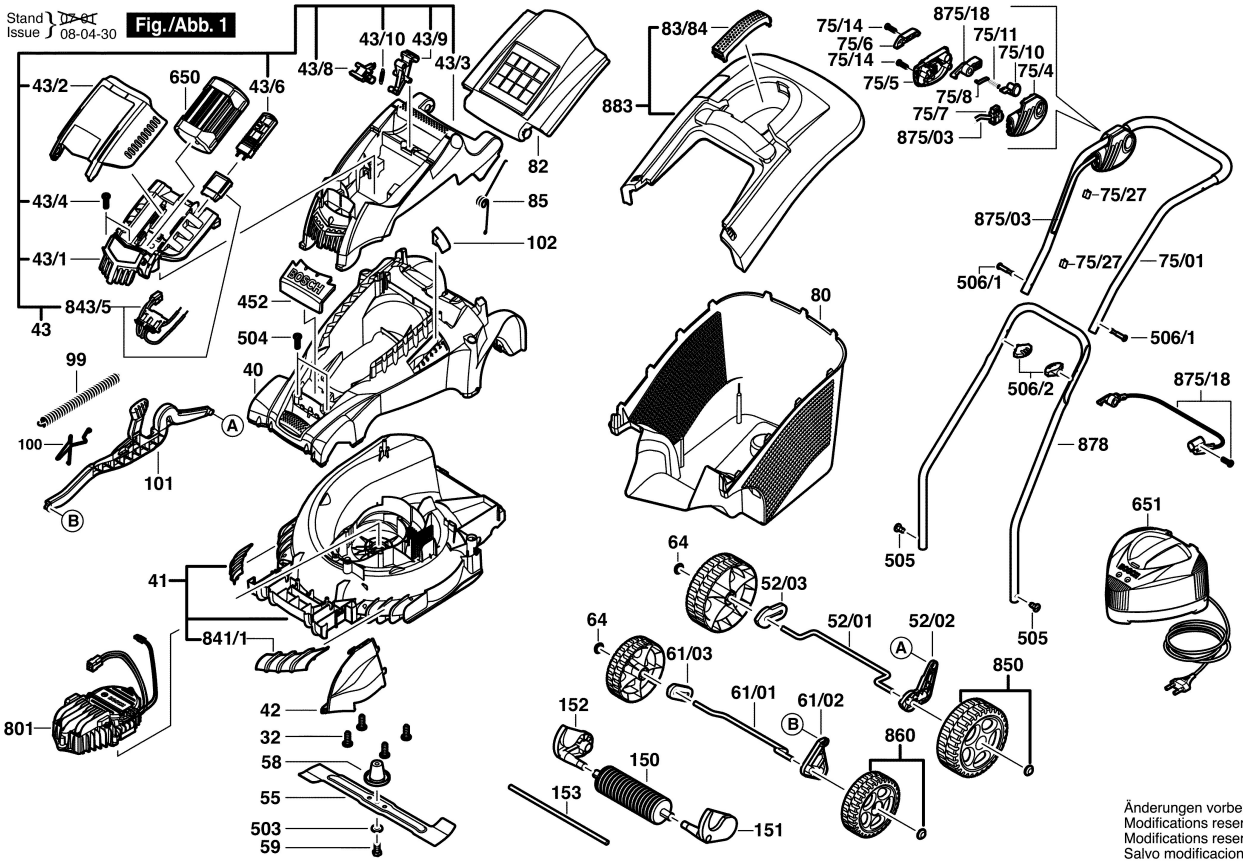

Änderungen vorbehalten
Modifications reserved
Modifications reservees
Salvo modificaciones