3 600 H85 D00

Stand } ~~12-09~~
Issue } 12-11-14
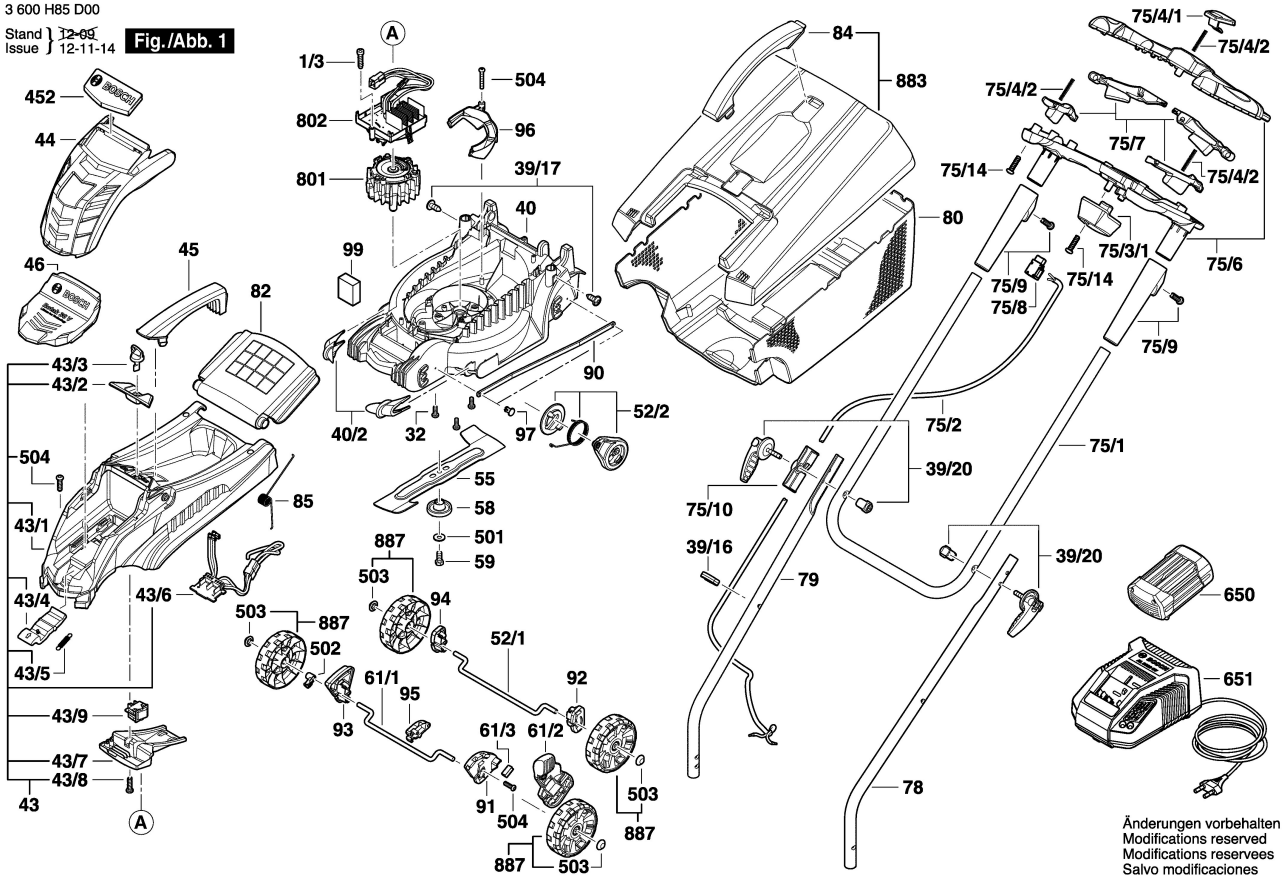
Fig./Abb. 1