3 600 HA7 540
Stand ~~14-03-20~~
Issue 14-03-26

**Fig./Abb. 1**

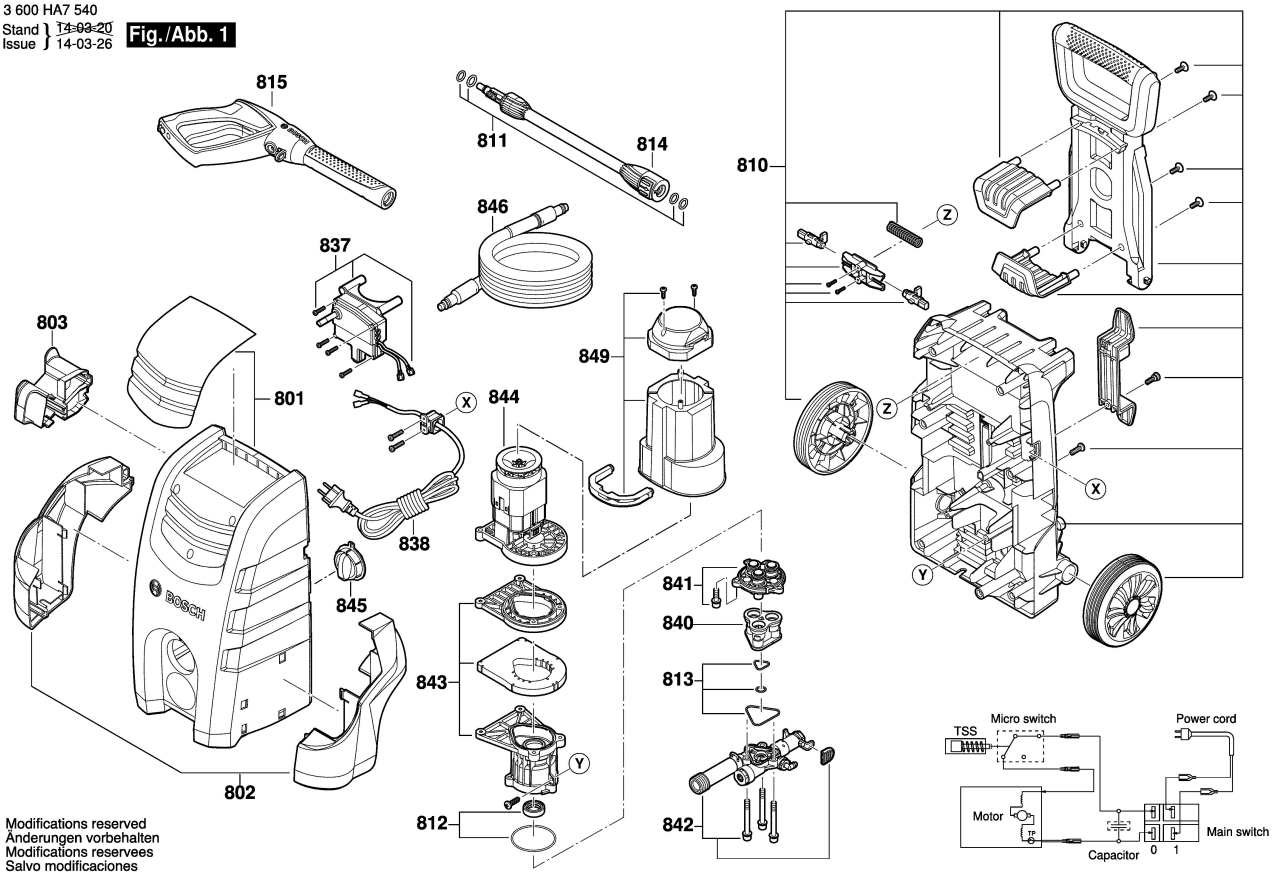


Modifications reserved
Änderungen vorbehalten
Modifications reservees
Salvo modificaciones