3 601 A9C 090

Stand } ~~13-05~~
Issue } 14-01-22
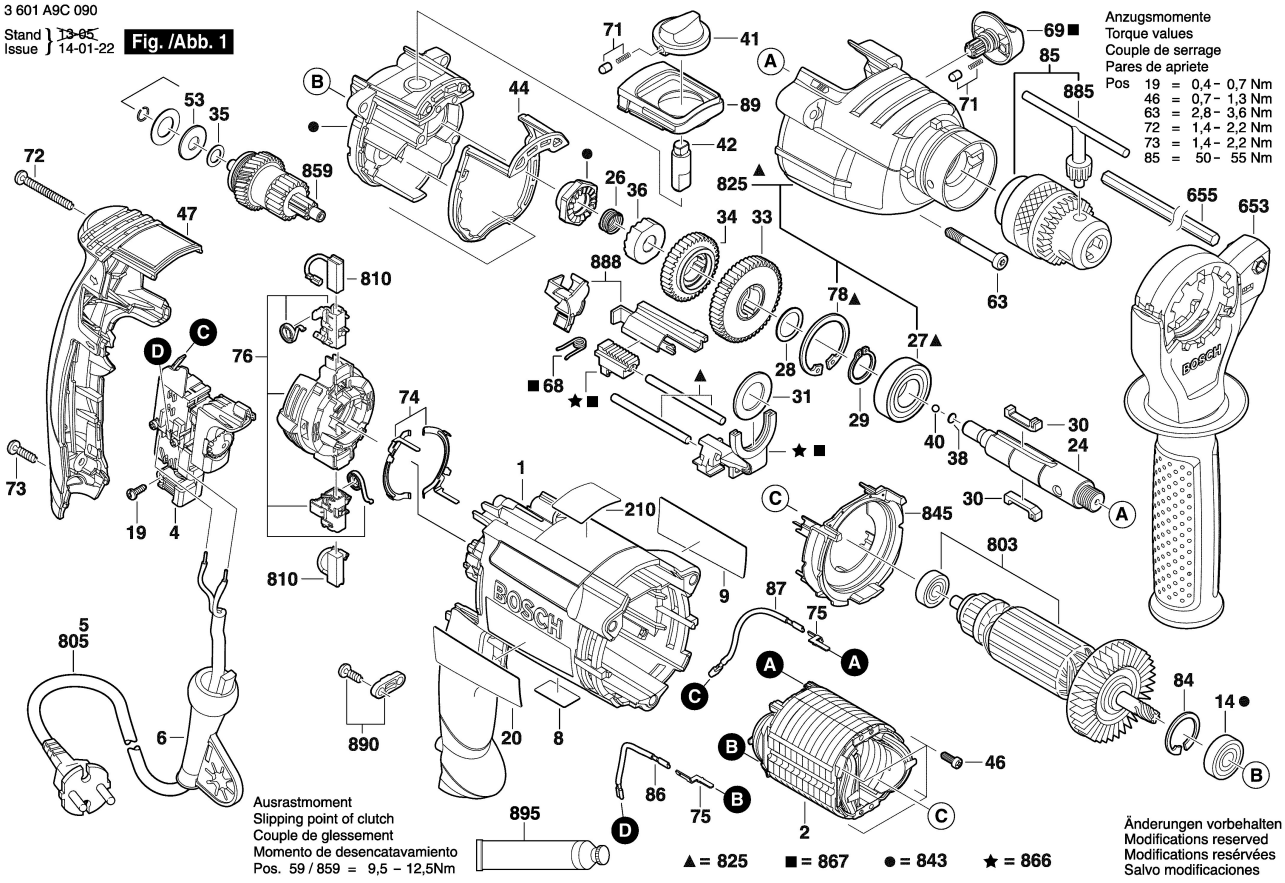
Fig. /Abb. 1