3 601 B18 192

Stand } ~~09-02~~
Issue } 14-02-07
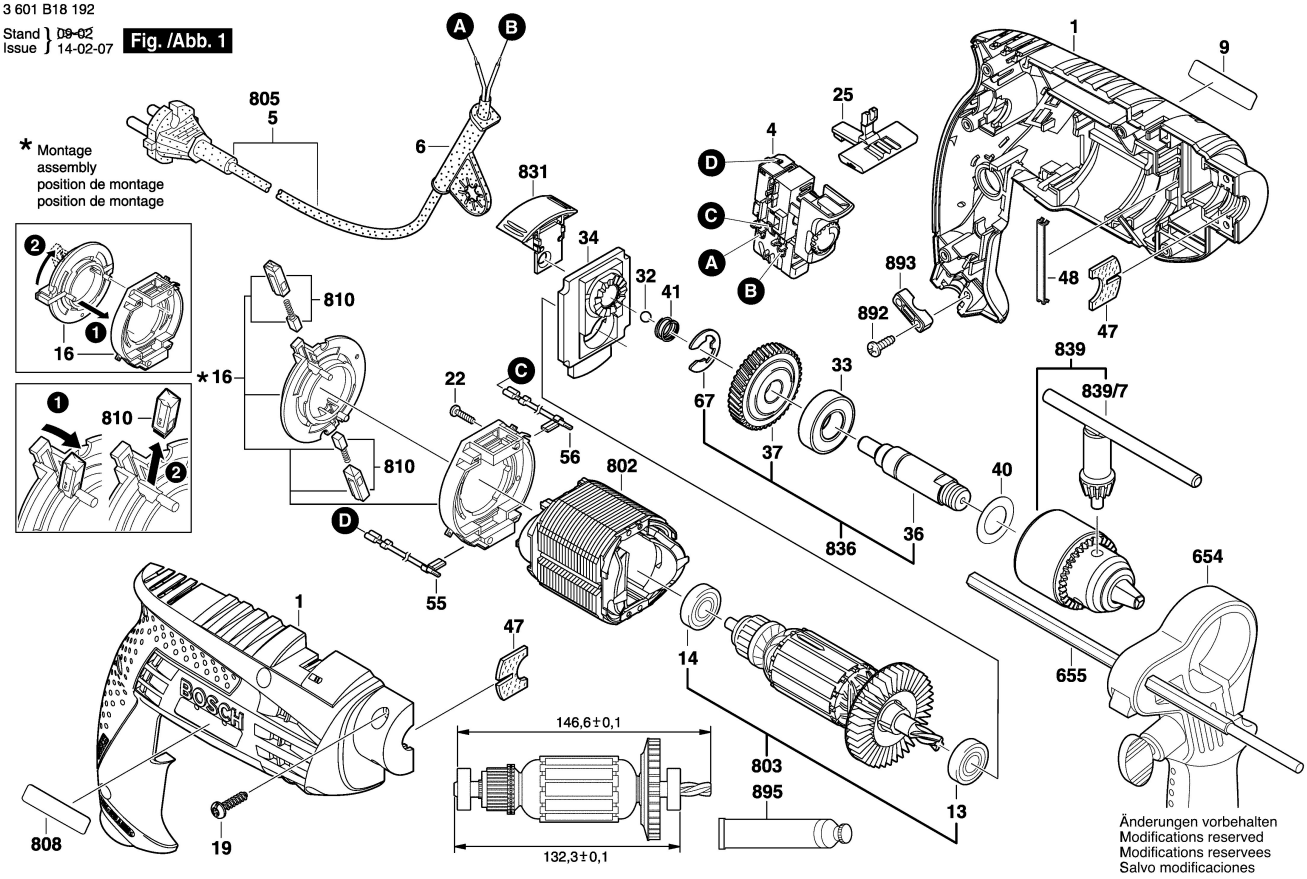
Fig. /Abb. 1