3 601 C59 2E0
Stand ~~13-08~~
Issue 14-03-31

Fig./Abb. 1

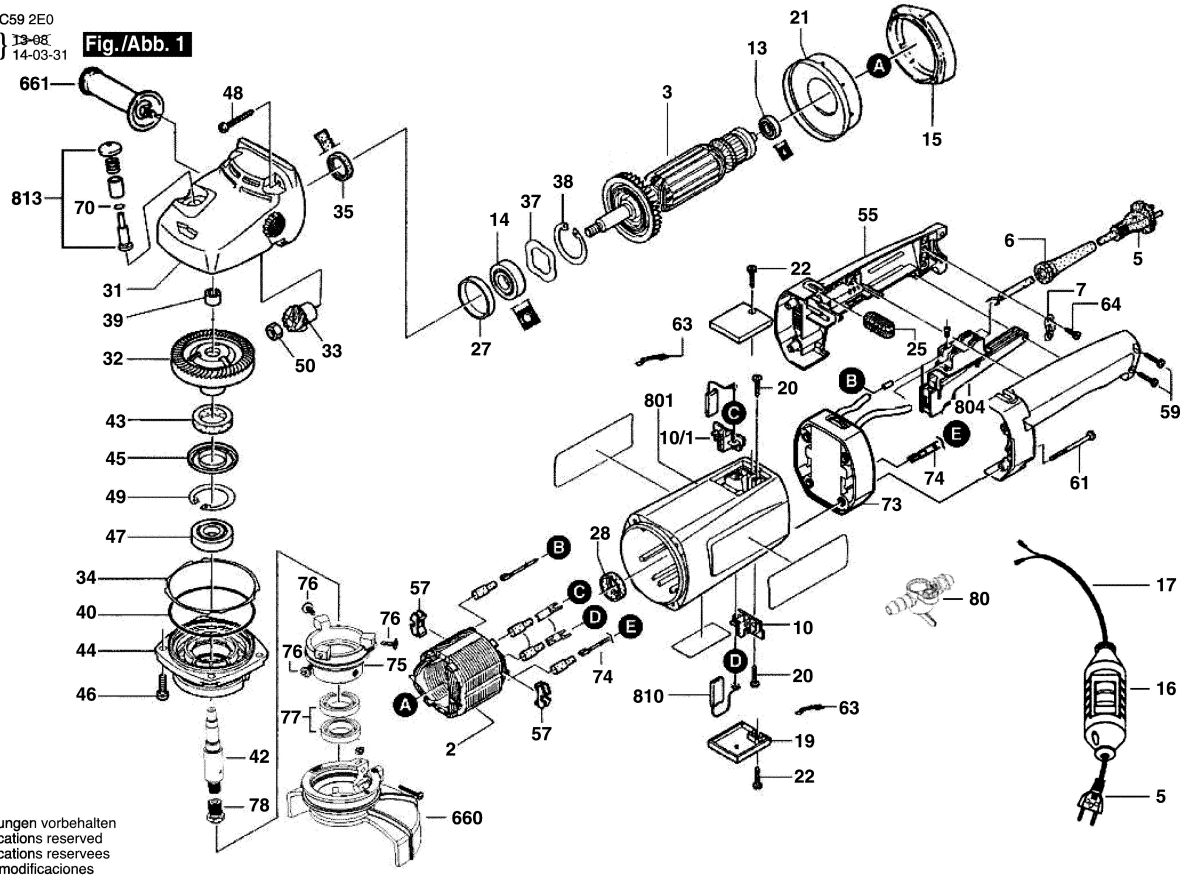

Änderungen vorbehalten
Modifications reserved
Modifications reservees
Salvo modificaciones