3 601 E8H 080
Issue Stand 12-02-22
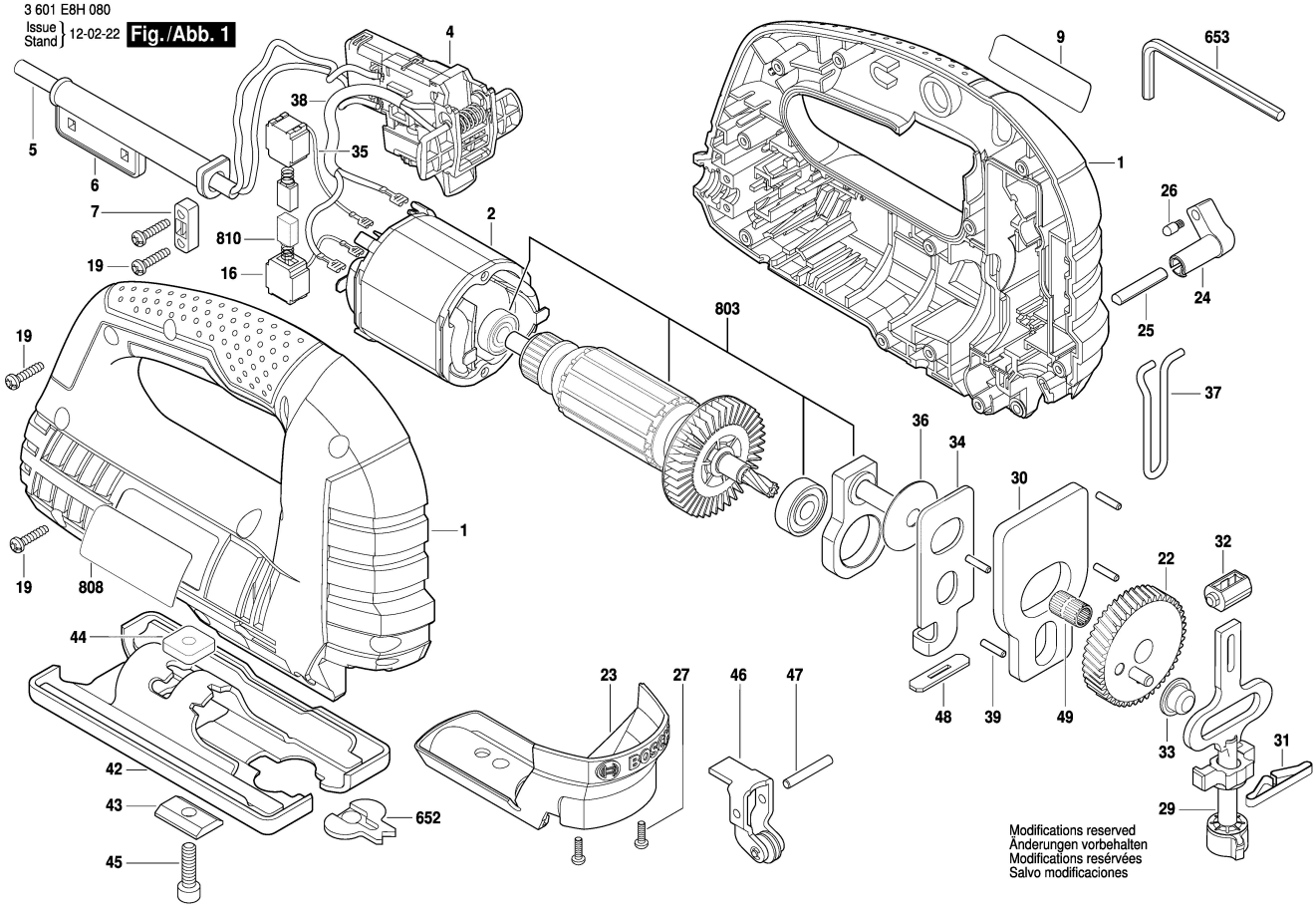
Fig./Abb. 1