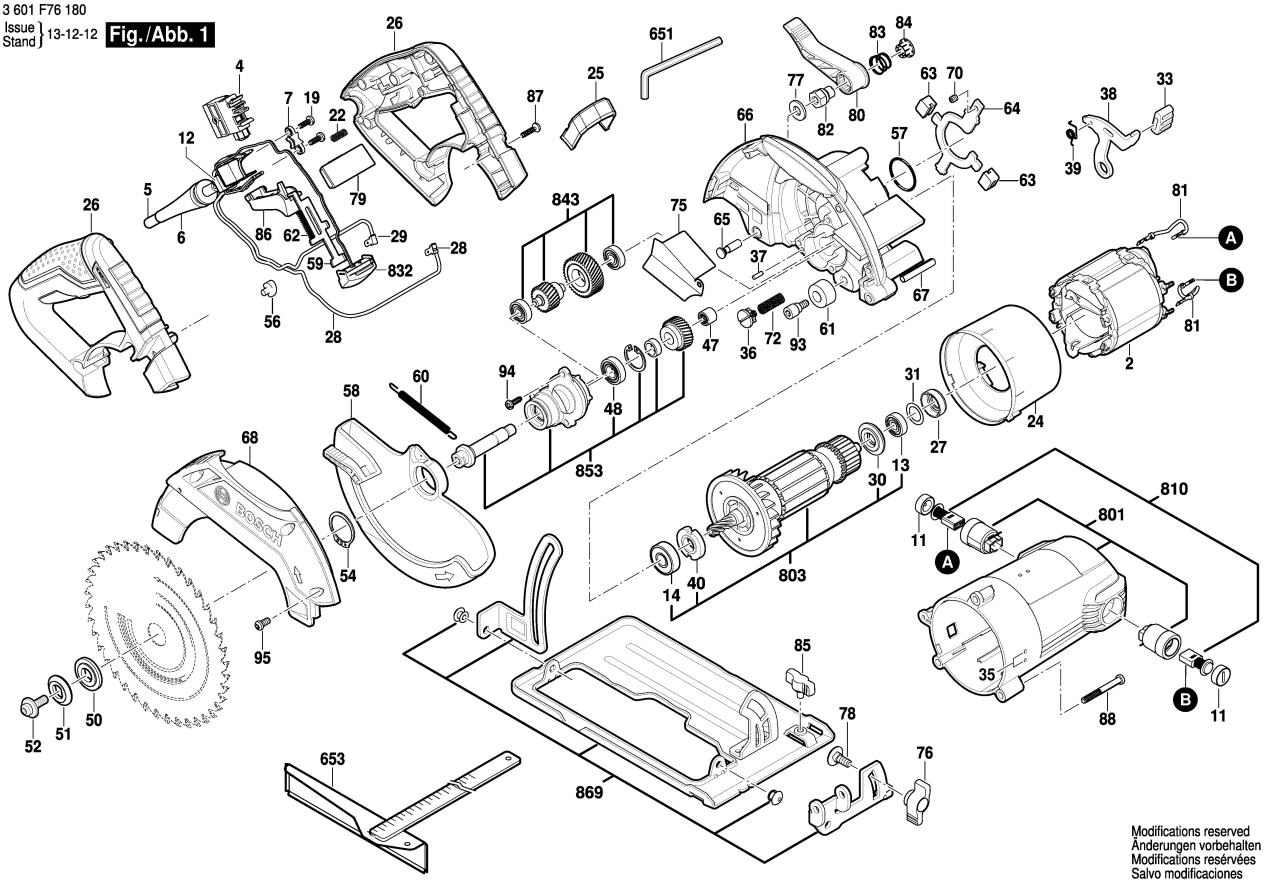3 601 F76 180
Issue Stand } 13-12-12 **Fig./Abb. 1**