3 601 G90 000

Stand } ~~11-11-16~~
Issue } 11-12-08

Fig./Abb. 1

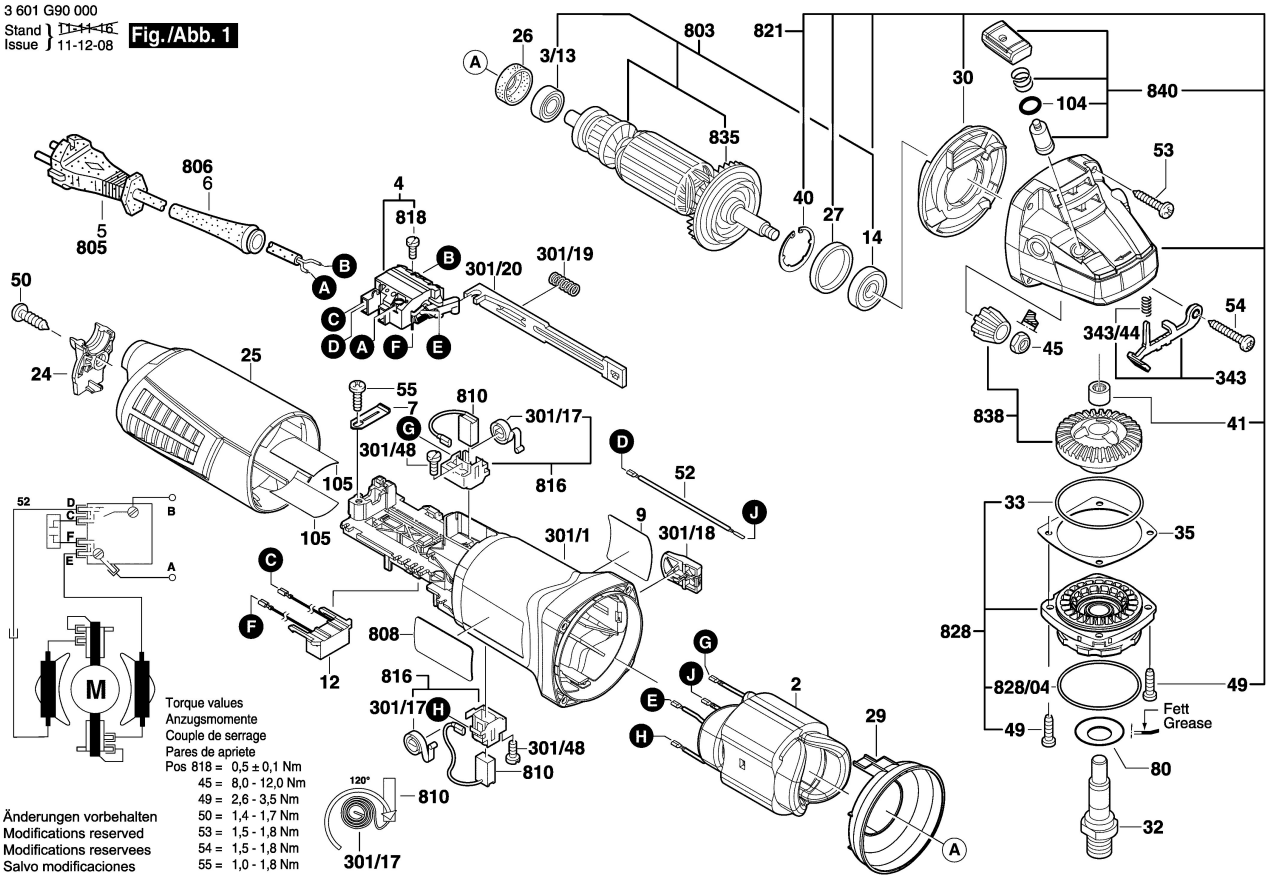

Änderungen vorbehalten
Modifications reserved
Modifications reservees
Salvo modificaciones

3 601 G90 000

Stand } ~~11-09~~
Issue } 14-03-27

Fig./Abb. 2

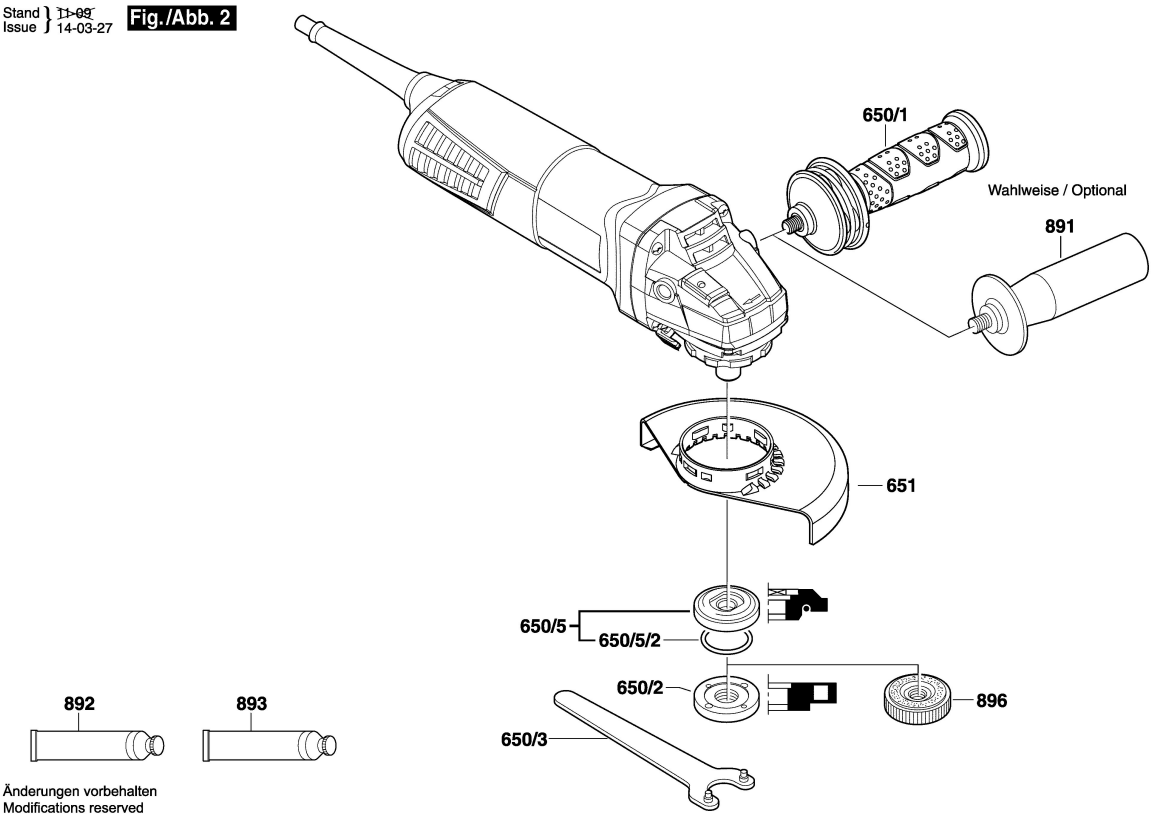

Änderungen vorbehalten
Modifications reserved
Modifications reservees
Salvo modificaciones