3 601 JB8 100

Stand ~~13-02-27~~
Issue 13-04-17

Fig./Abb. 1

Anzugsmomente
Torque values
Couple de serrage
Pares de apriete

Pos
101 = 0,50 - 1,00
105 = 1,70 - 2,00

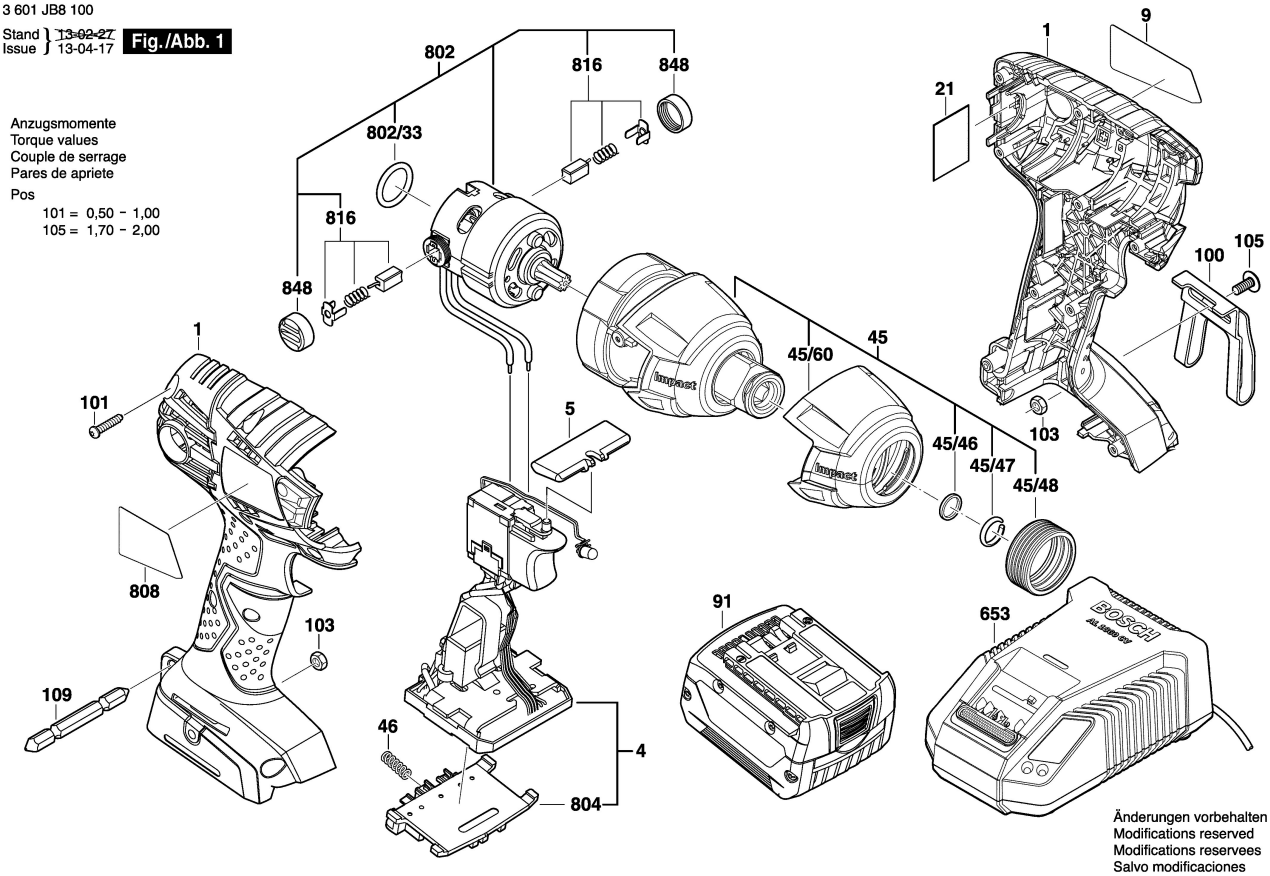

Änderungen vorbehalten
Modifications reserved
Modifications reservees
Salvo modificaciones