3 603 D09 051

Stand ~~D-K~~
Issue 10-09-22
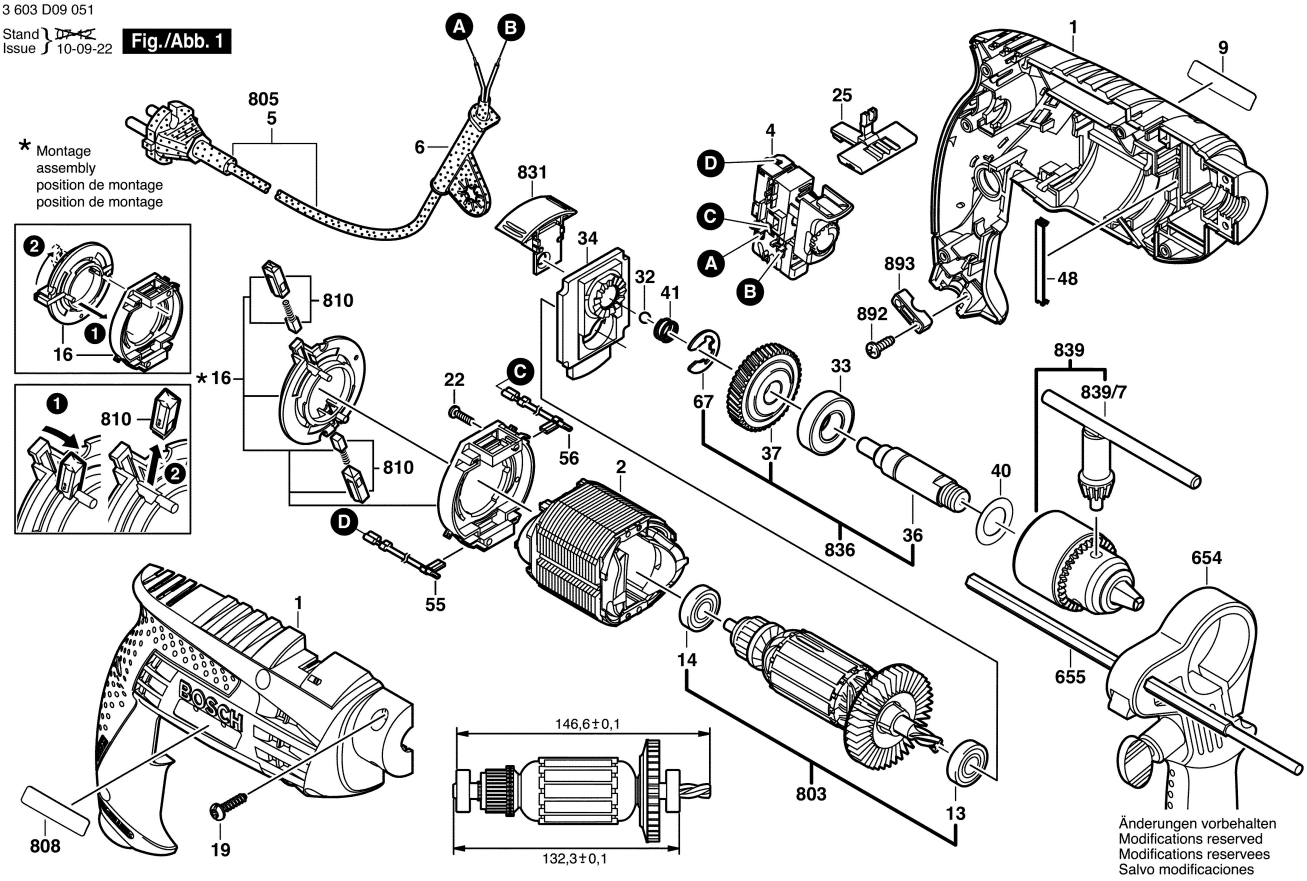
Fig./Abb. 1