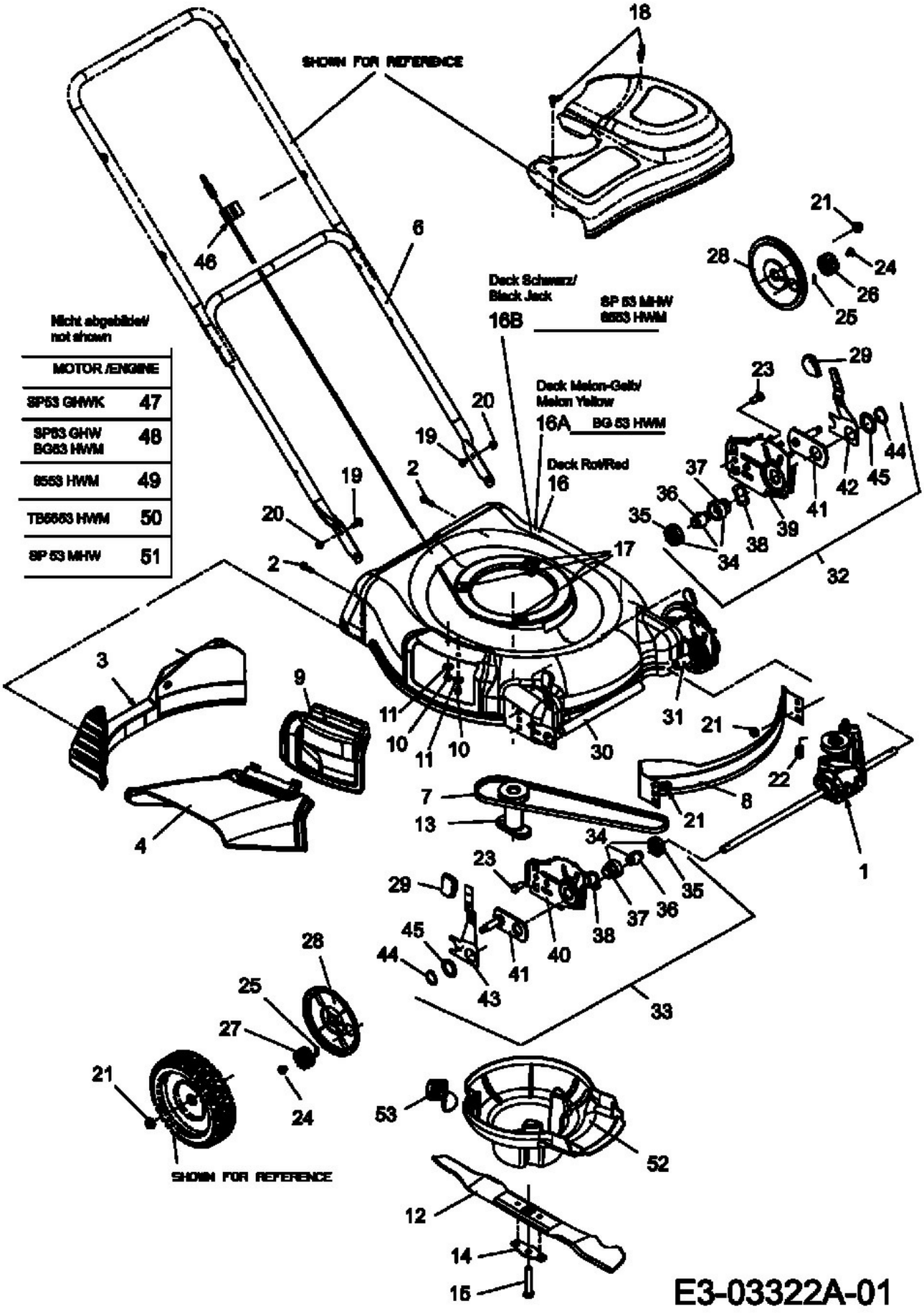
SHOWN FOR REFERENCE
Deck Schwarz/
Black Jack
16B
SP 53 MHW
6553 HWM
Deck Melon-Gelb/
Melon Yellow
16A
BG 53 HWM
Deck Rot/Red
16
Nicht abgebildet/
not shown
MOTOR /ENGINE
SP53 GHWK 47
SP53 GHW
BG53 HWM 48
6553 HWM 49
TB6553 HWM 50
SP 53 MHW 51
SHOWN FOR REFERENCE
E3-03322A-01