0 600 832 203

Stand } ~~95-05~~
Issue } 03-09-03

Fig./Abb. 1

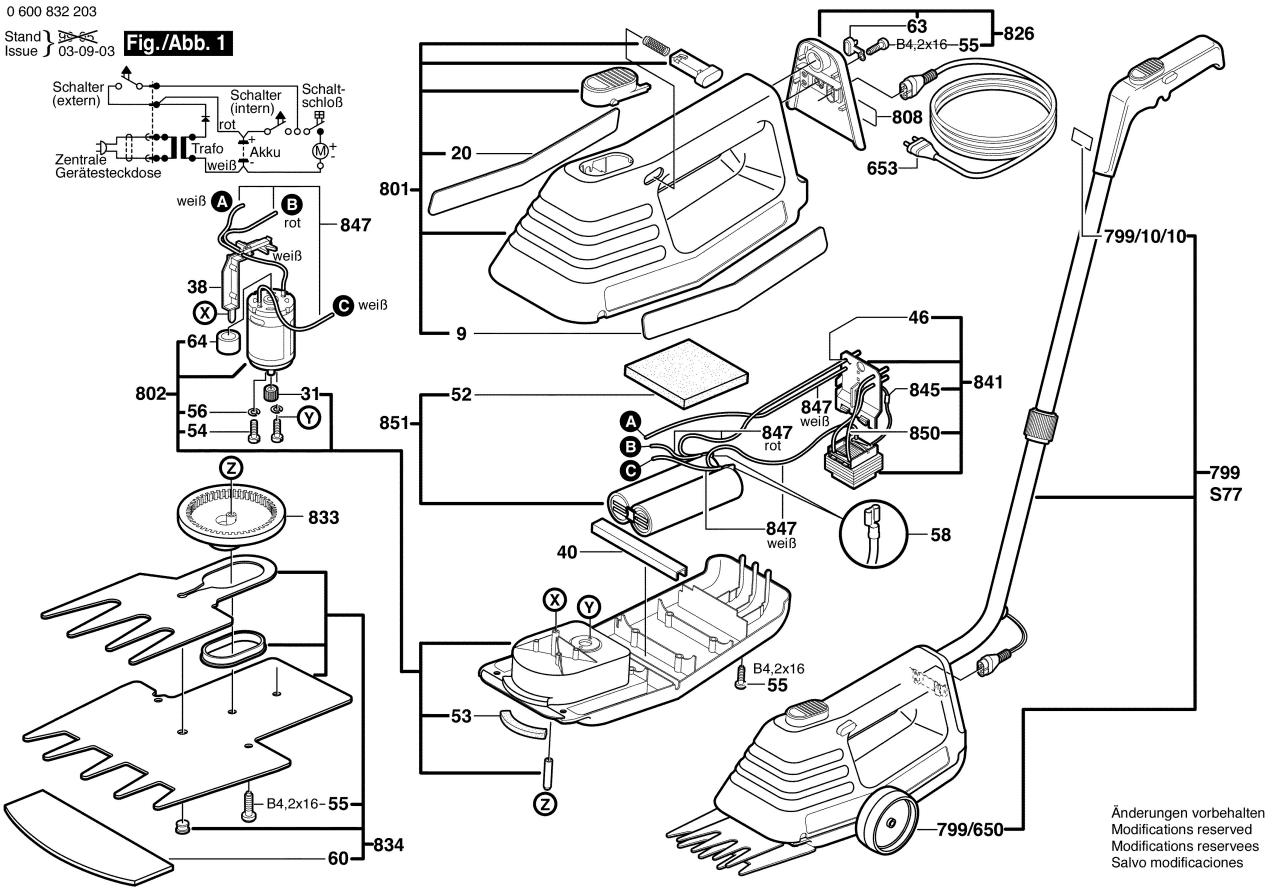

Änderungen vorbehalten
Modifications reserved
Modifications reservees
Salvo modificaciones