0 600 832 403

Stand } ~~99-06~~
Issue } 99-08-25
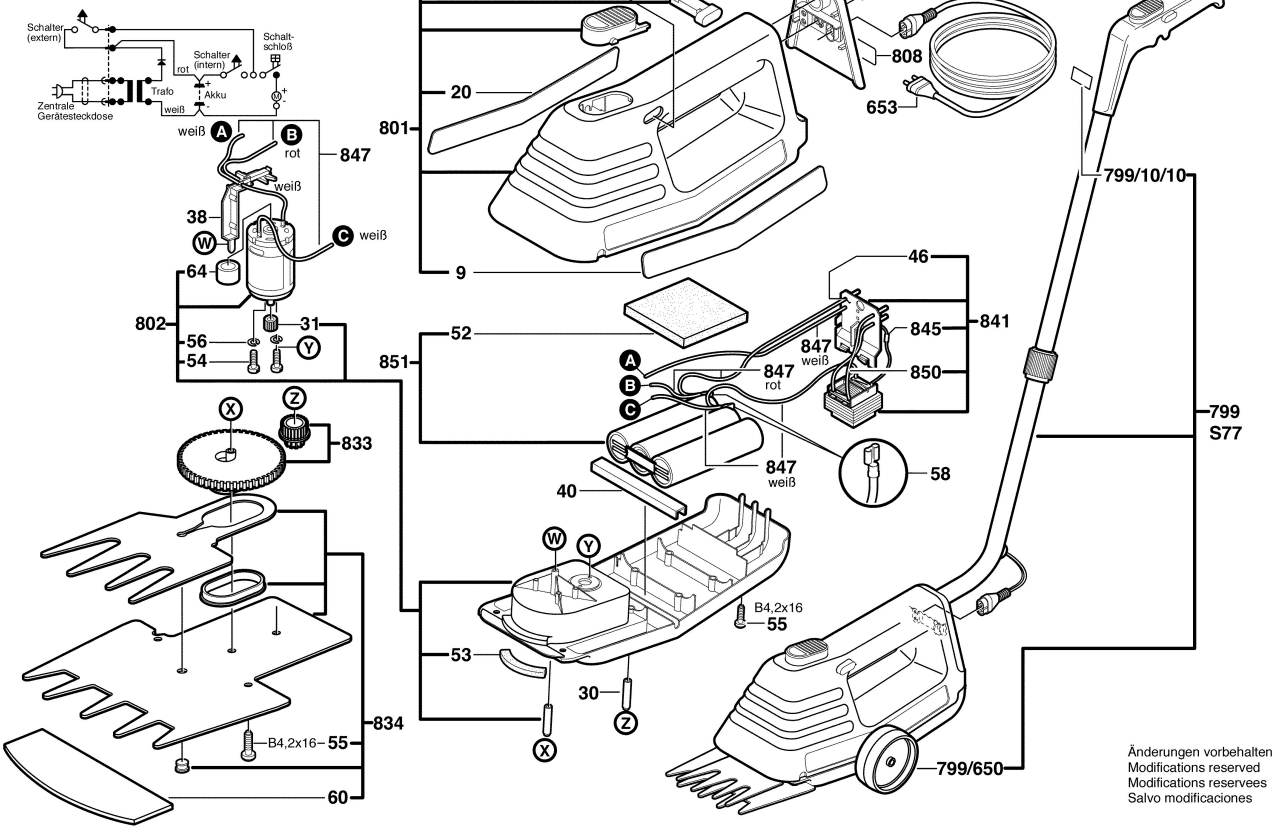
Fig./Abb. 1