0 600 889 103

Stand ~~10-99~~
Issue 01-01-23

Fig./Abb. 1

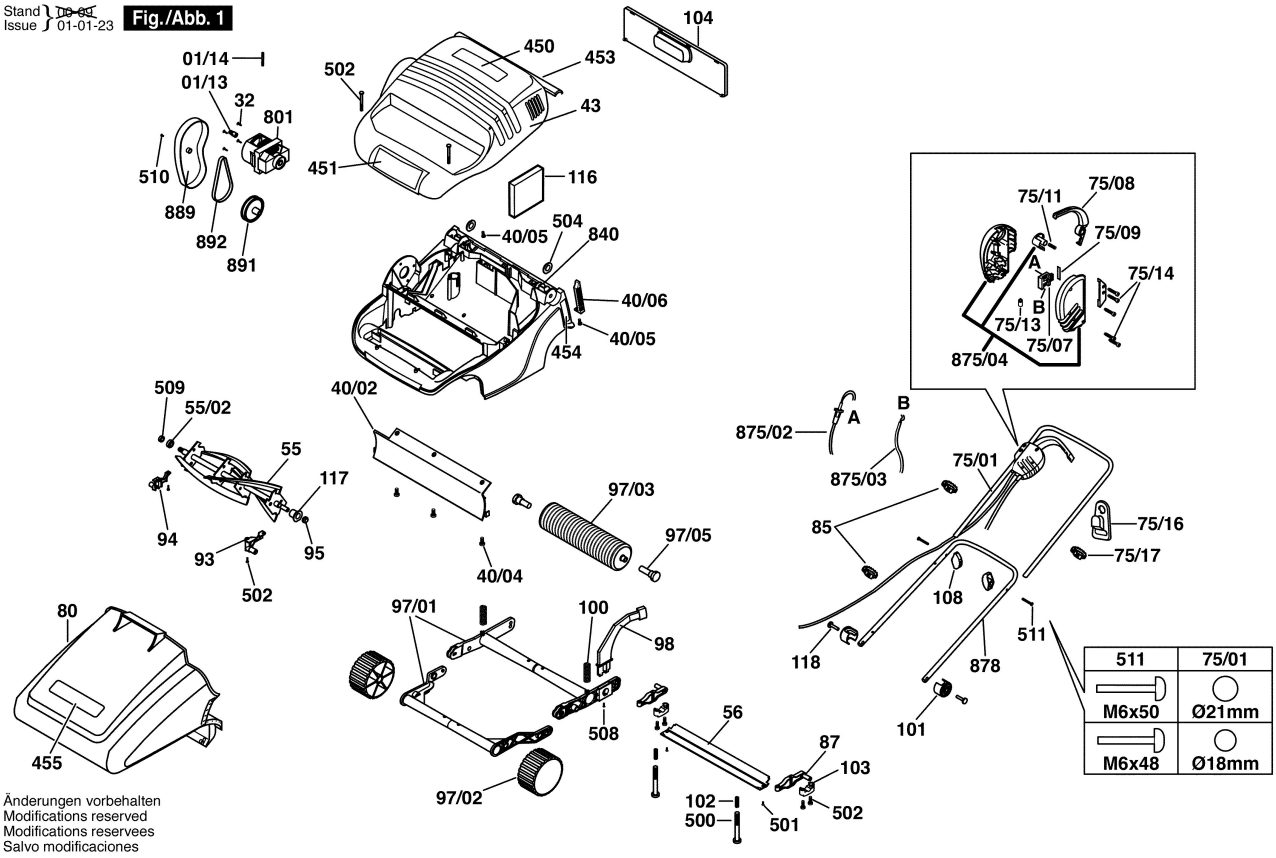

Änderungen vorbehalten
Modifications reserved
Modifications reservees
Salvo modificaciones