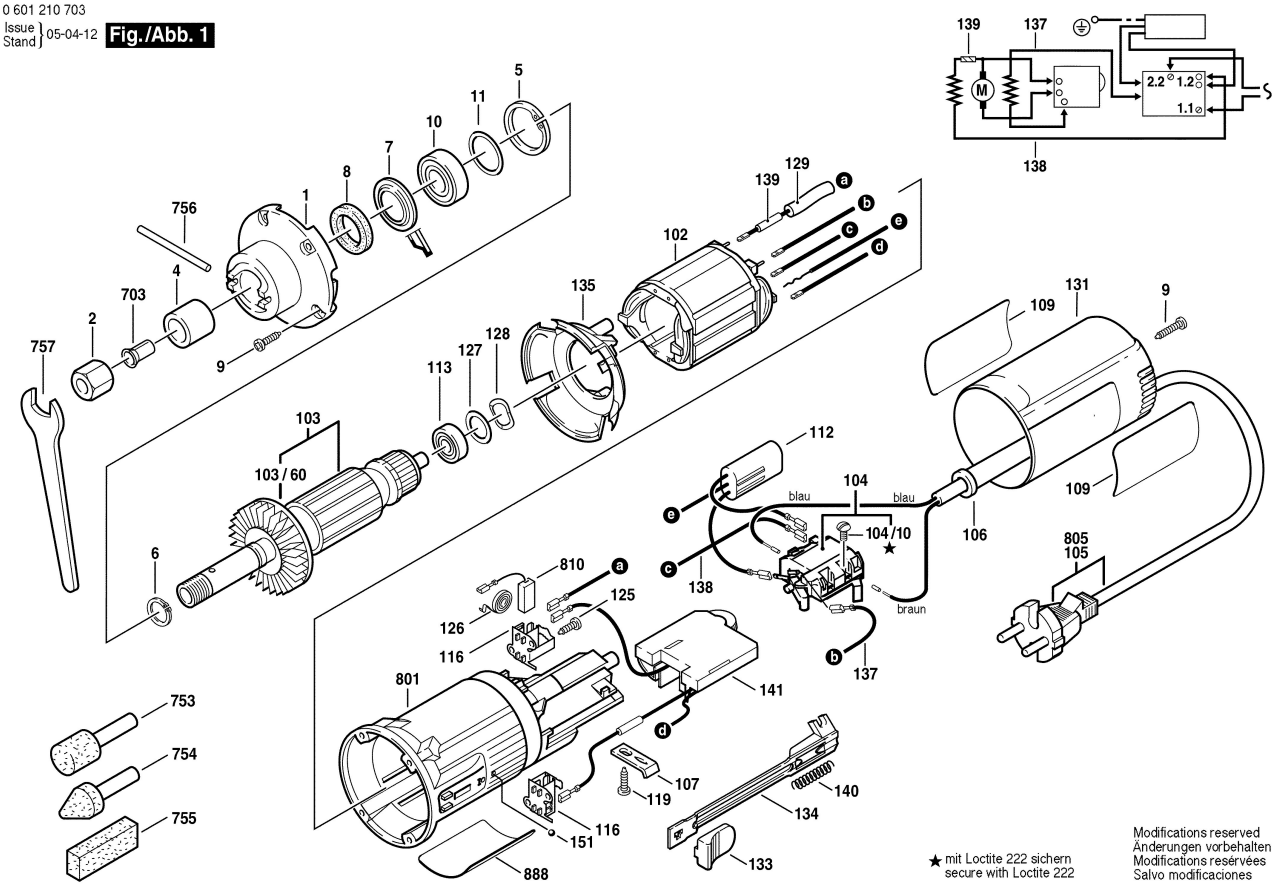0 601 210 703
Issue Stand 05-04-12 **Fig./Abb. 1**