0 601 273 703
Issue / Stand } 00-10-18
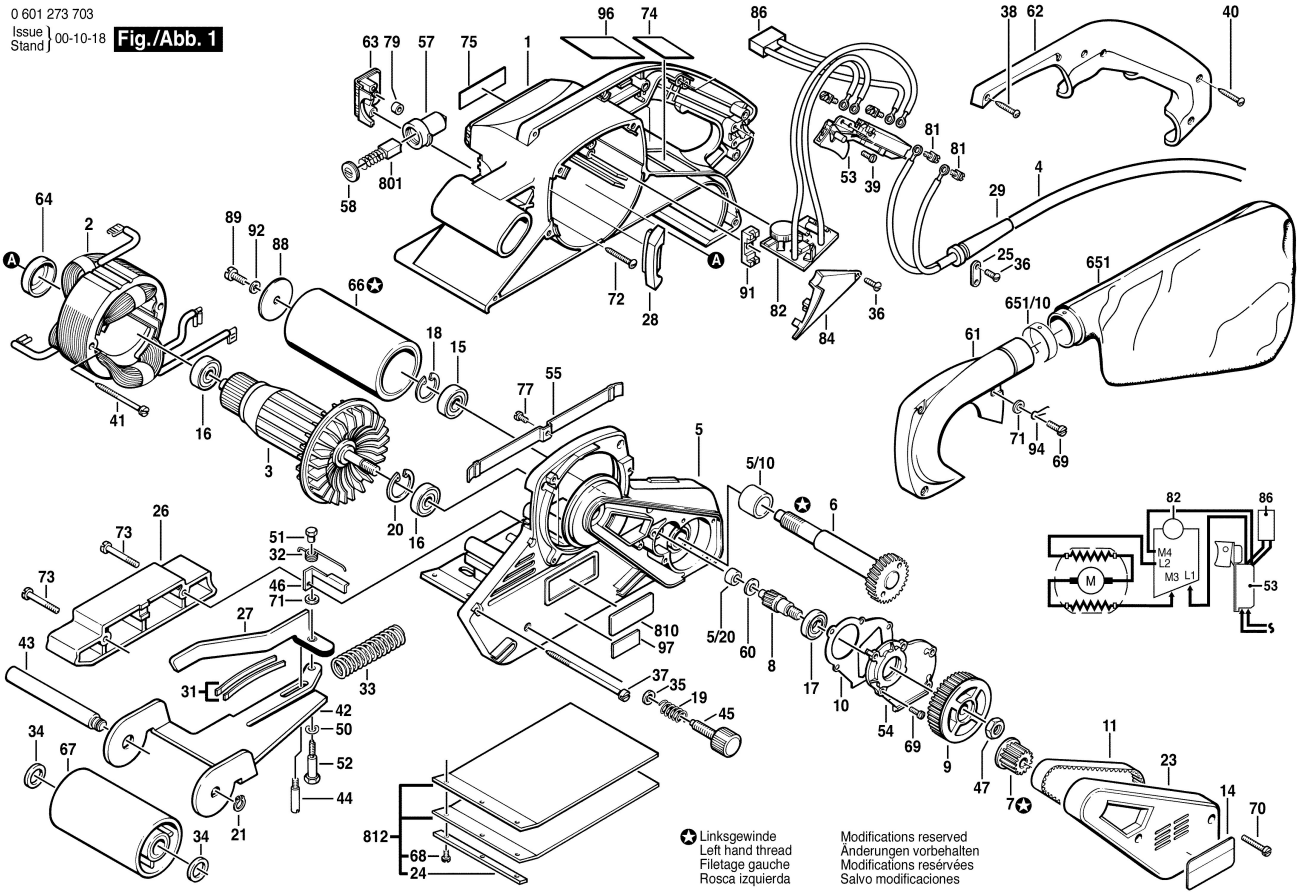
Fig./Abb. 1