0 601 276 739
Issue Stand 05-11-30
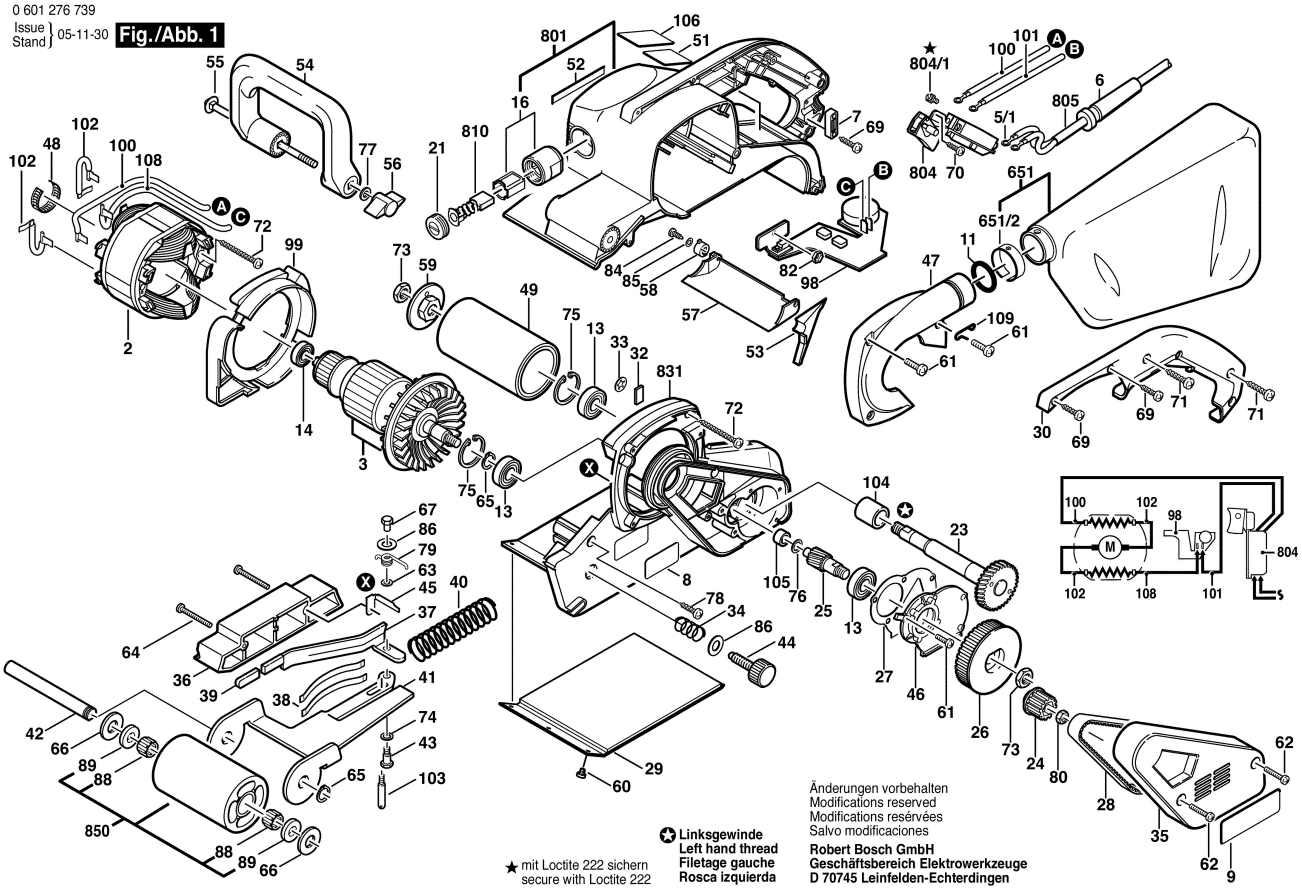
Fig./Abb. 1