0 601 372 539
Stand } ~~11-07~~
Issue } 13-08-28
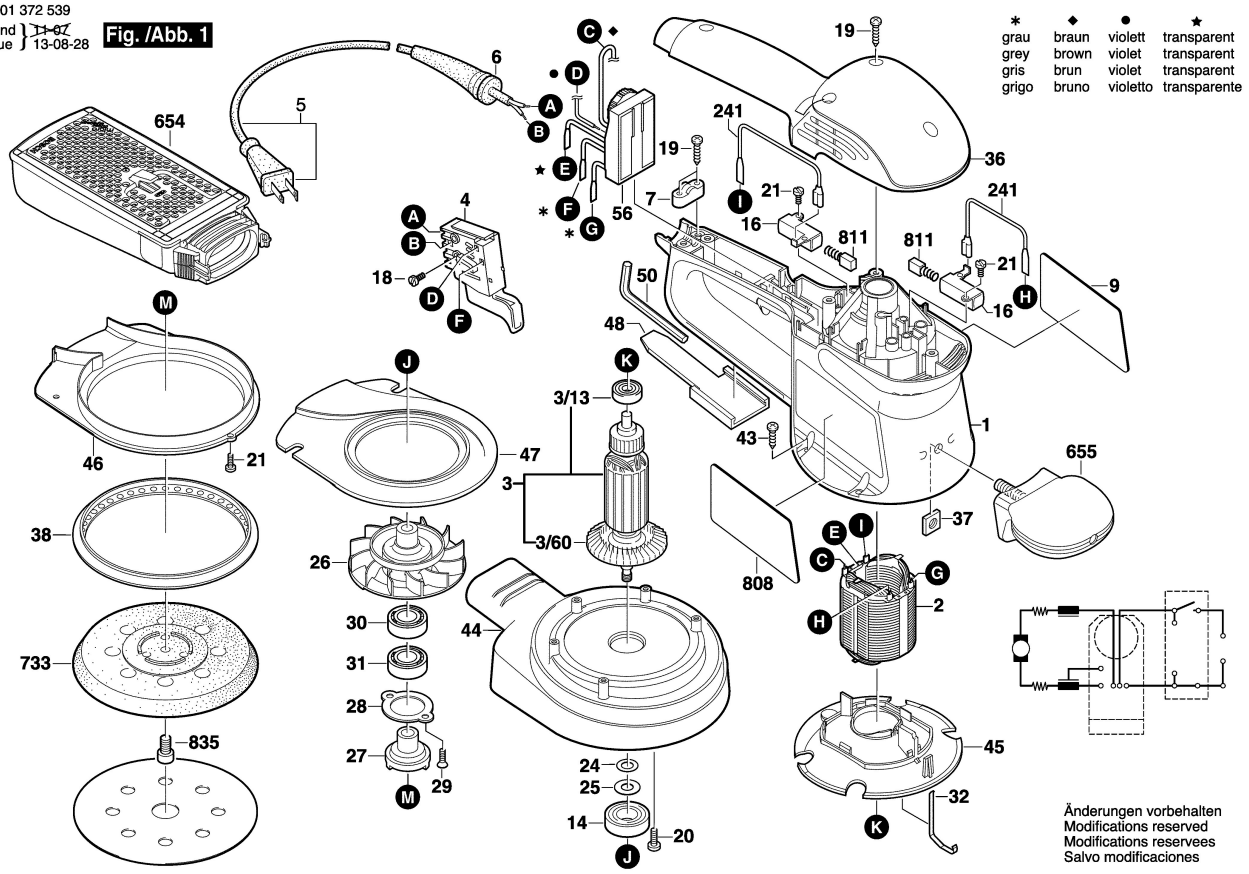
Fig. /Abb. 1