0 601 377 6E3
Stand ~~13-11~~
Issue 14-07-22

Fig./Abb. 1

Gerad - Verzahnung

● Vor Demontage des Ankers Kohlebürsten 5mm zurückziehen !

Before the armature is removed the carbon brushes must be withdrawn by at least 5mm !

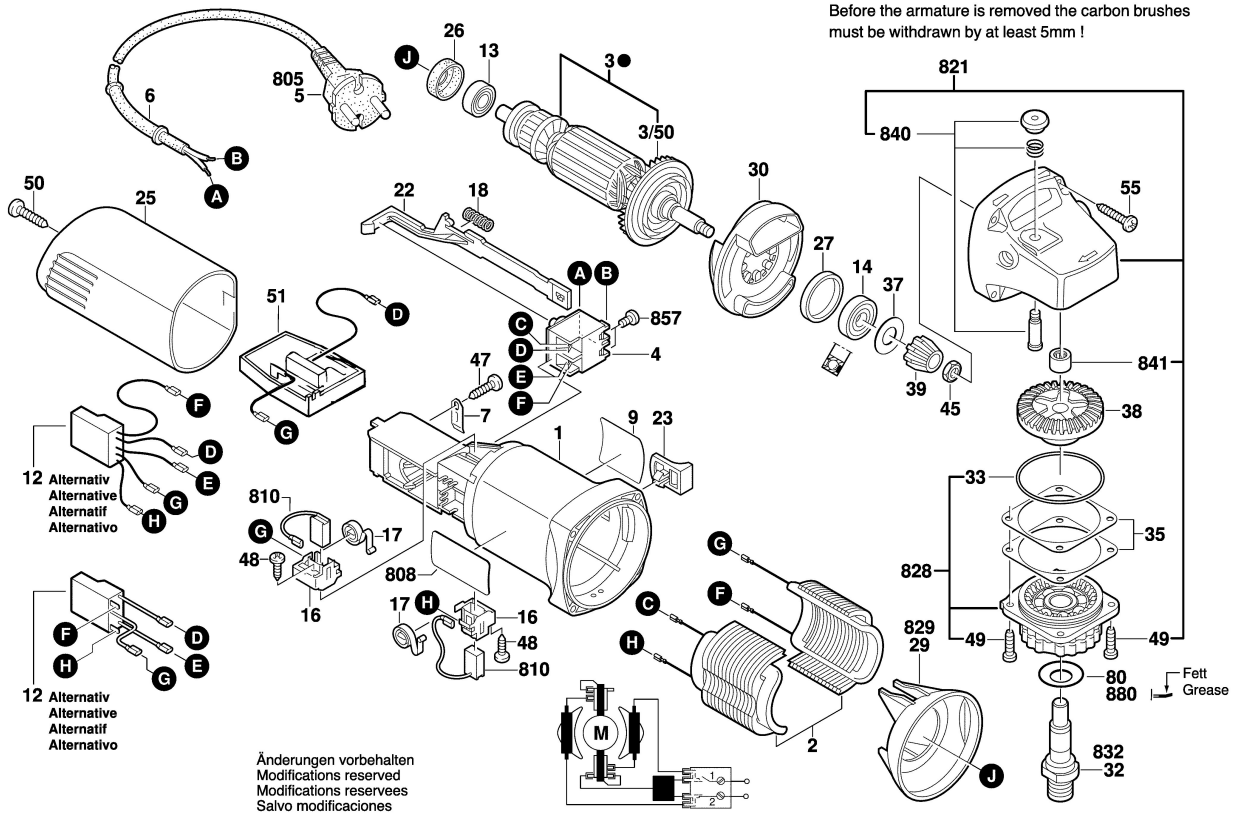

0 601 377 6E3
Stand ~~09-01-21~~
Issue 09-01-27

Fig./Abb. 2

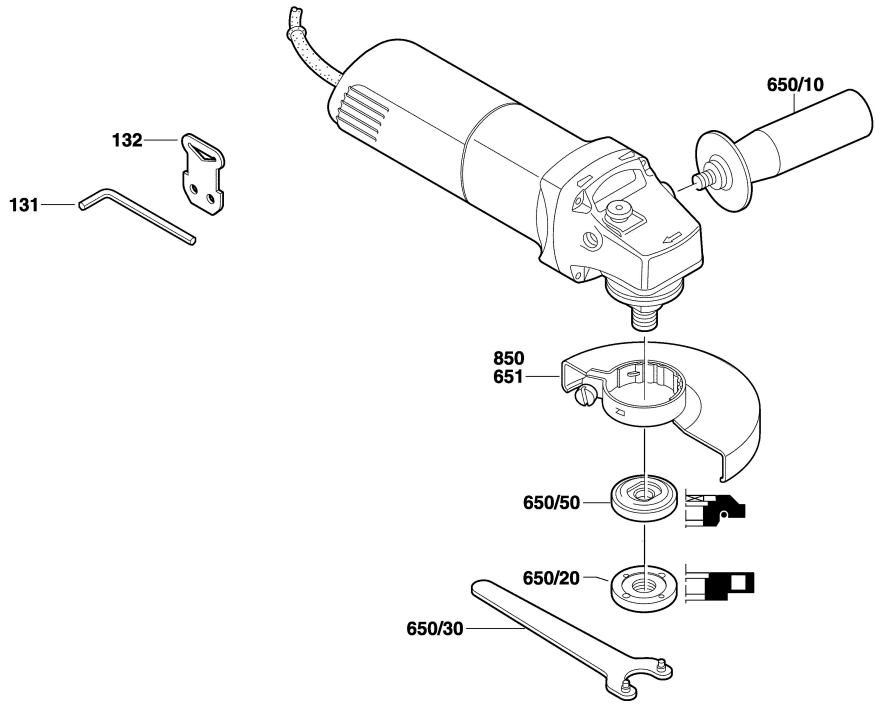

Änderungen vorbehalten
Modifications reserved
Modifications reservees
Salvo modificaciones