0 601 436 703
Issue / Stand 06-02-30
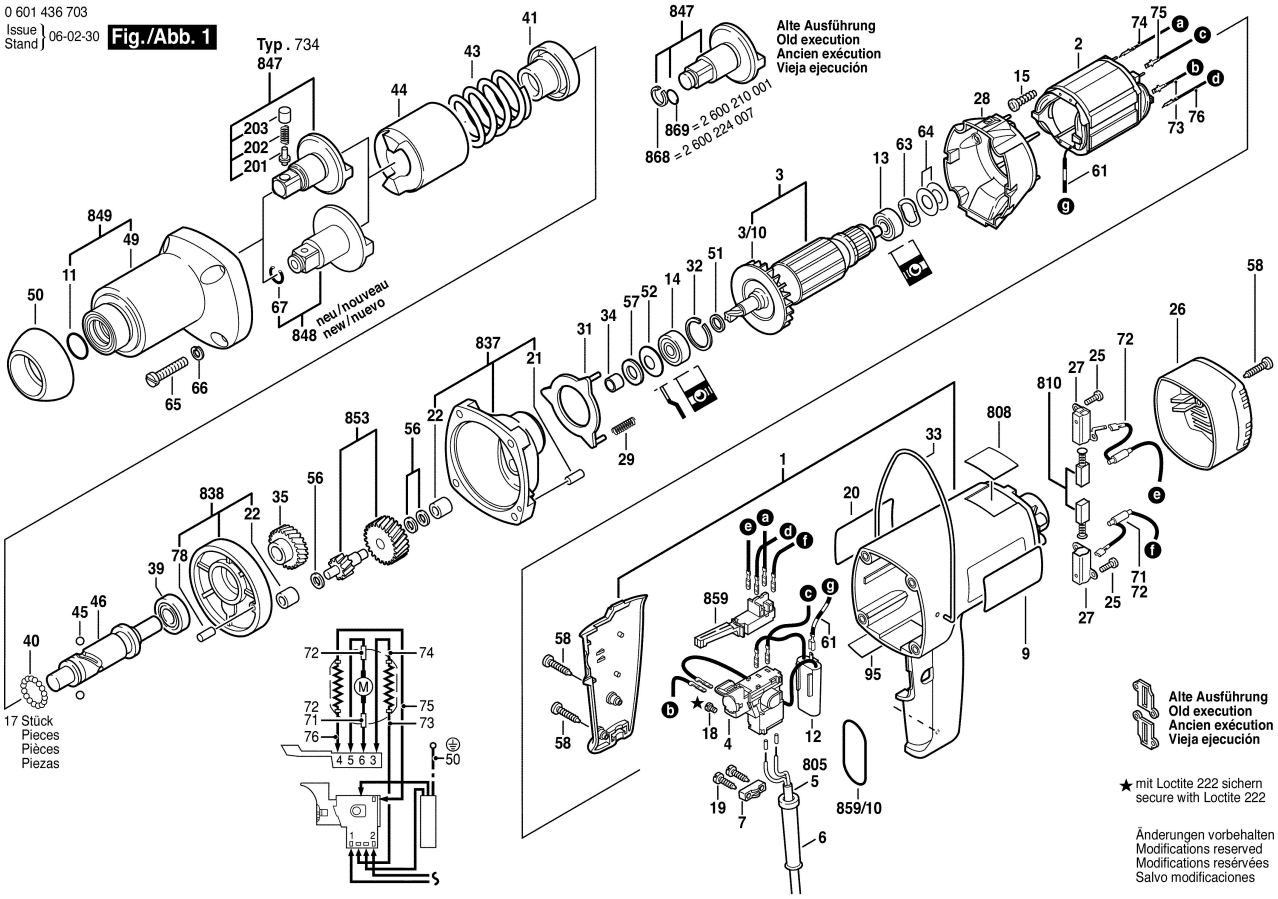
Fig./Abb. 1