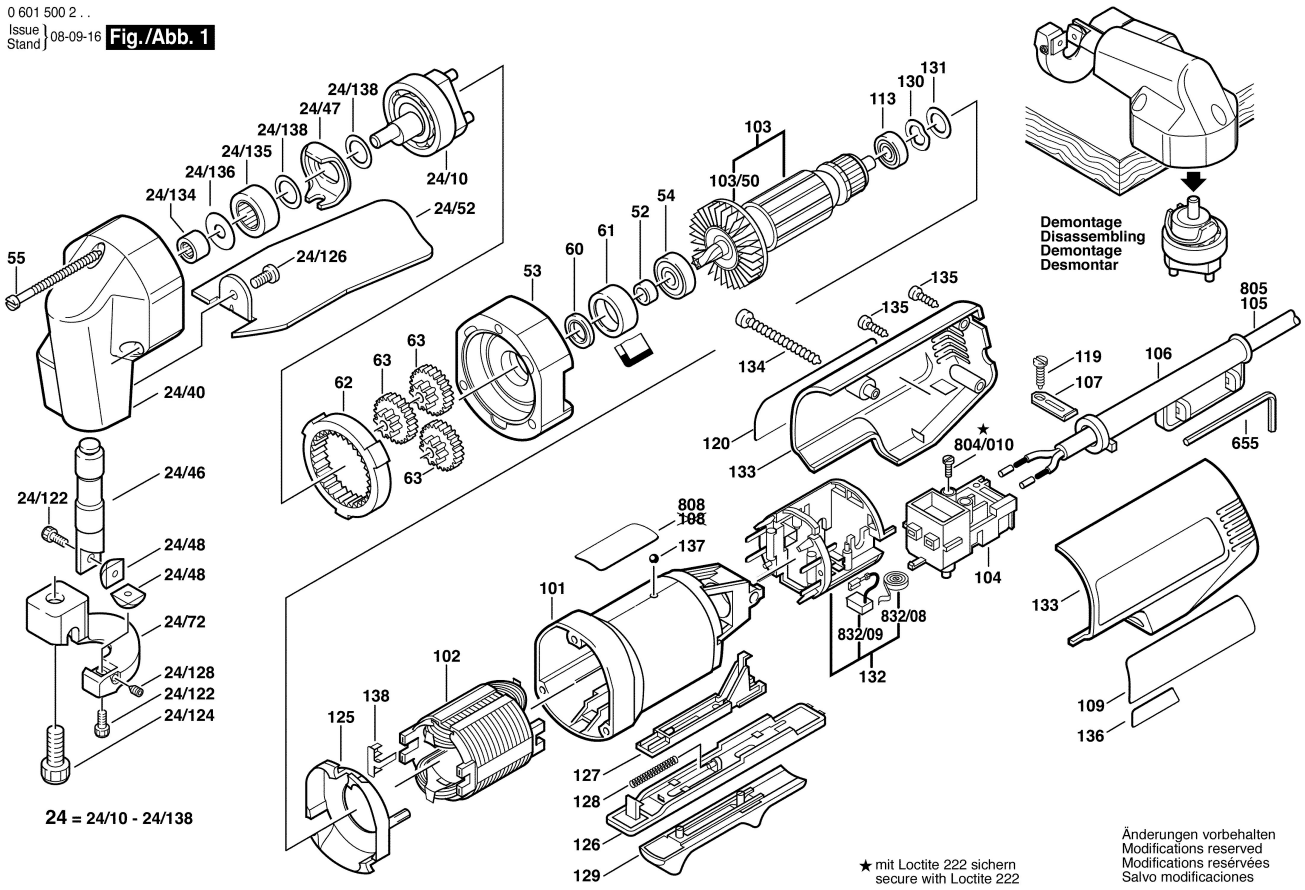0 601 500 2 . .
Issue Stand } 08-09-16 **Fig./Abb. 1**