0 601 569 003
Issue / Stand 02-04-09
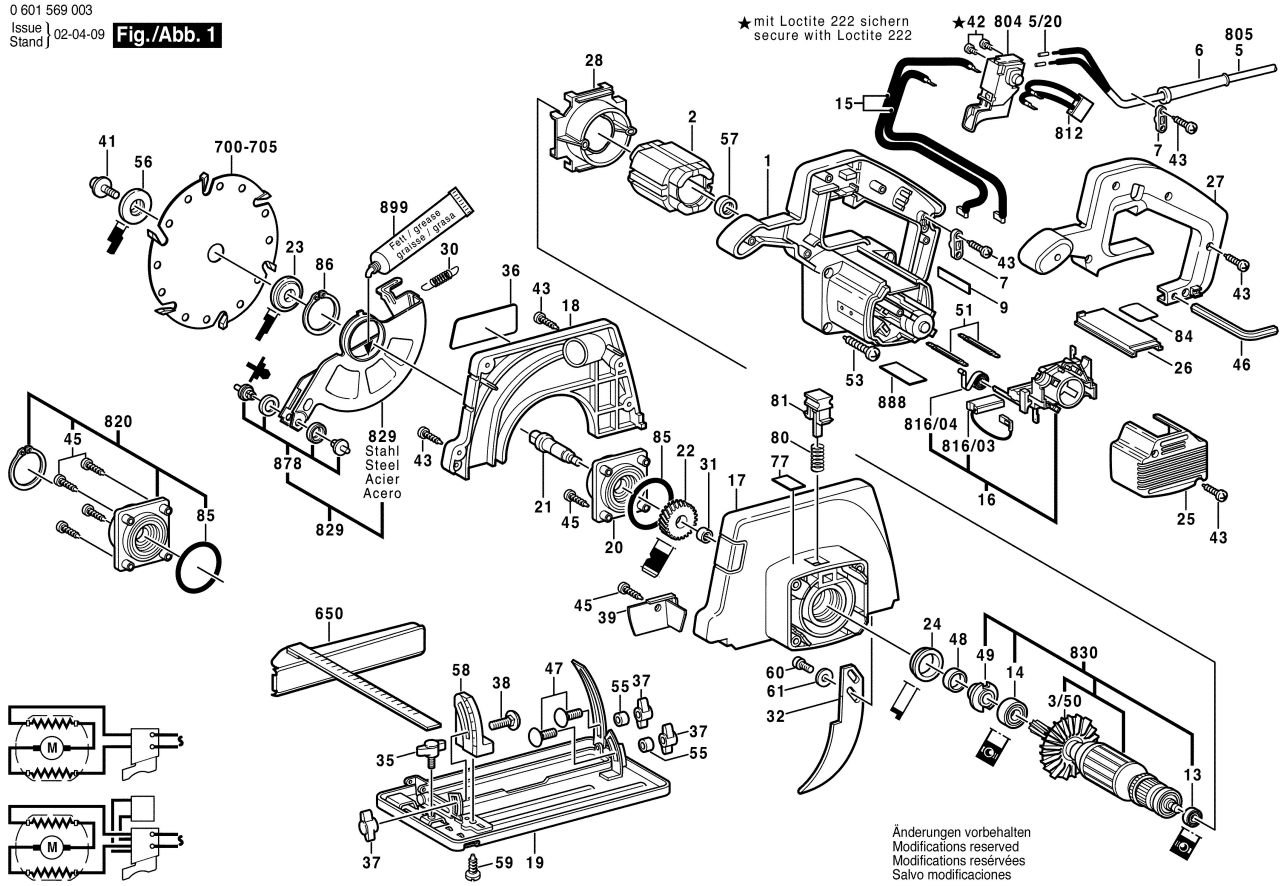
Fig./Abb. 1