0 601 582 103
Stand } ~~07-01~~
Issue } 07-02-07

Fig./Abb. 1

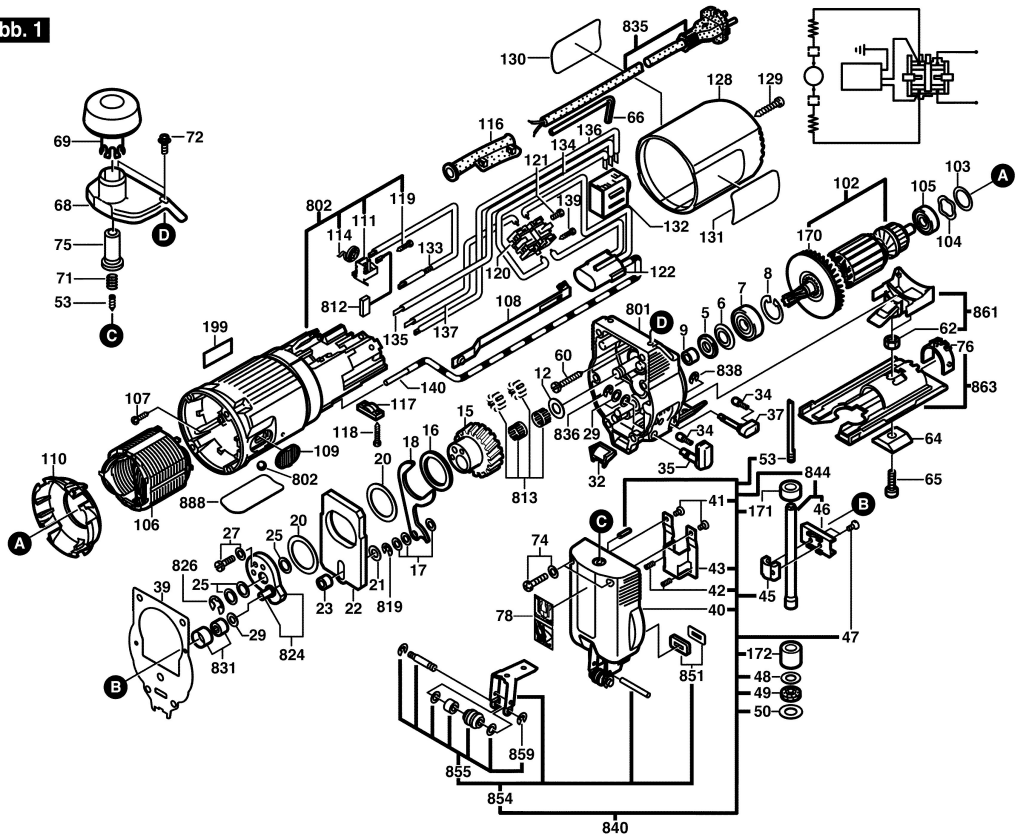

Änderungen vorbehalten
Modifications reserved
Modifications resérvées
Salvo modificaciones