0 601 593 003
Stand } ~~04-12~~
Issue } 08-06-04

Fig./Abb. 1

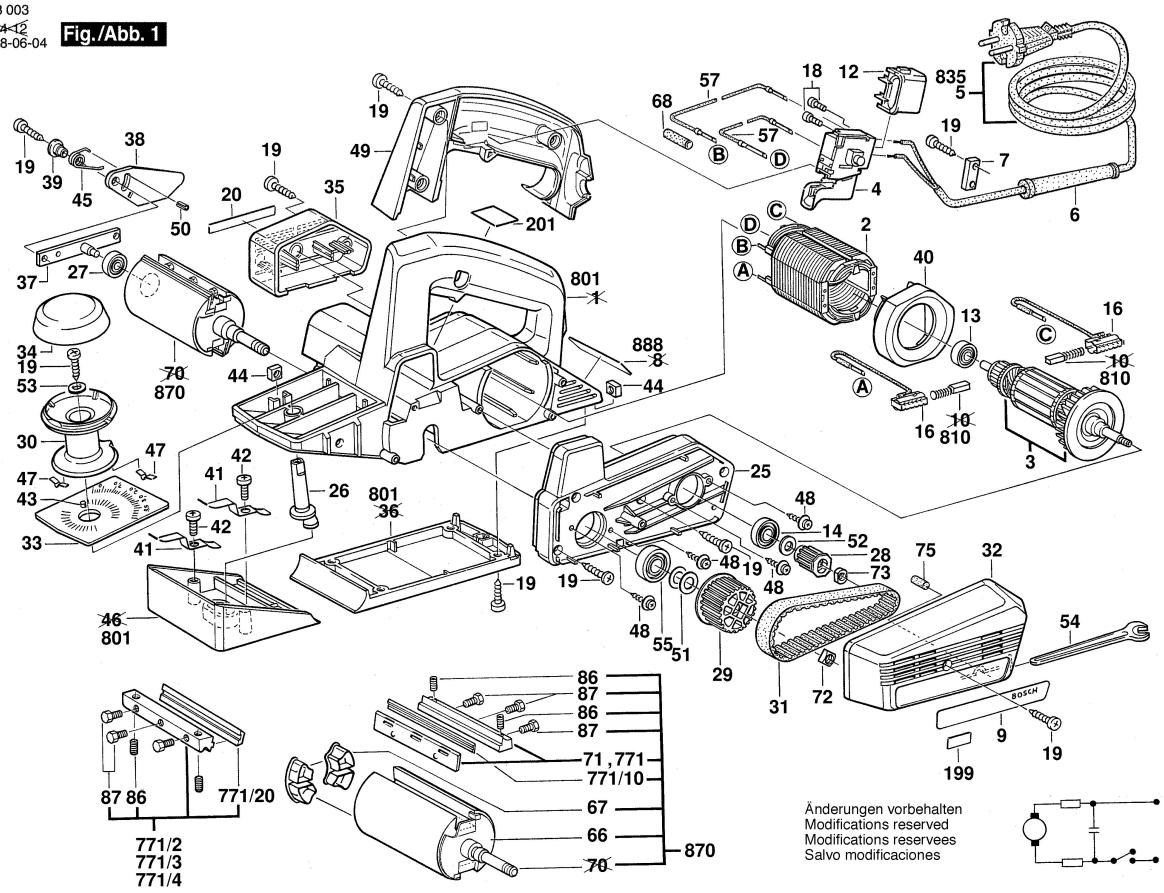

0 601 593 003
Stand } ~~08-06~~
Issue } 14-04-10
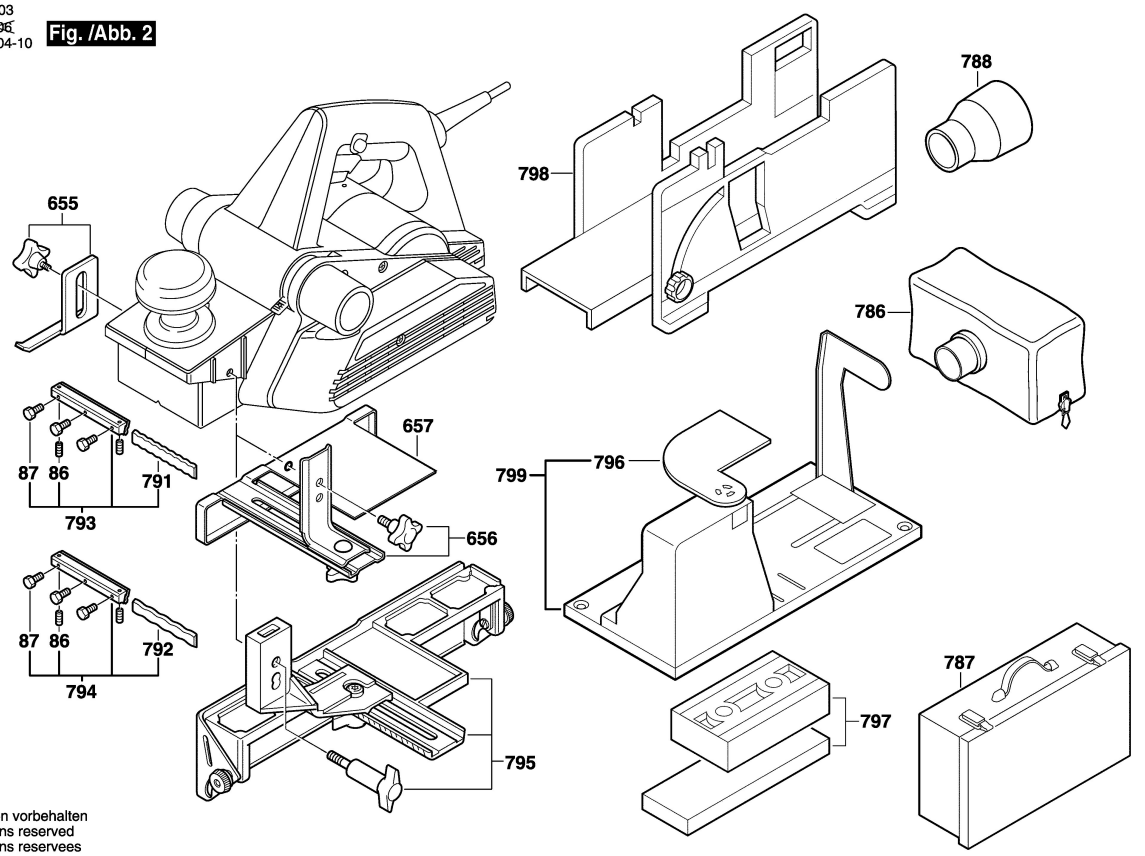
Fig. /Abb. 2