0 601 606 334
Issue } 00-05-30
Stand
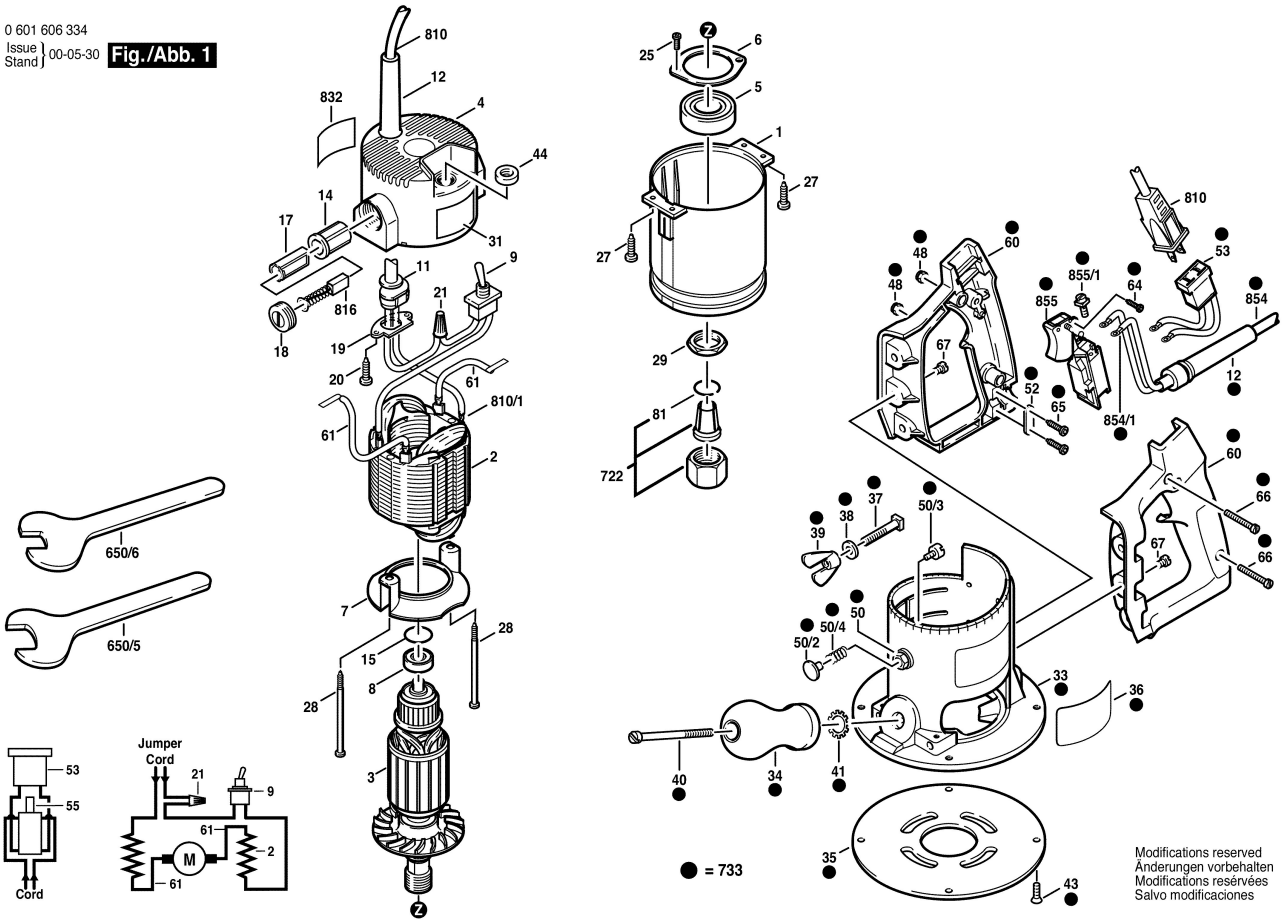
Fig./Abb. 1