0 601 608 037

Issue / Stand 99-12-21
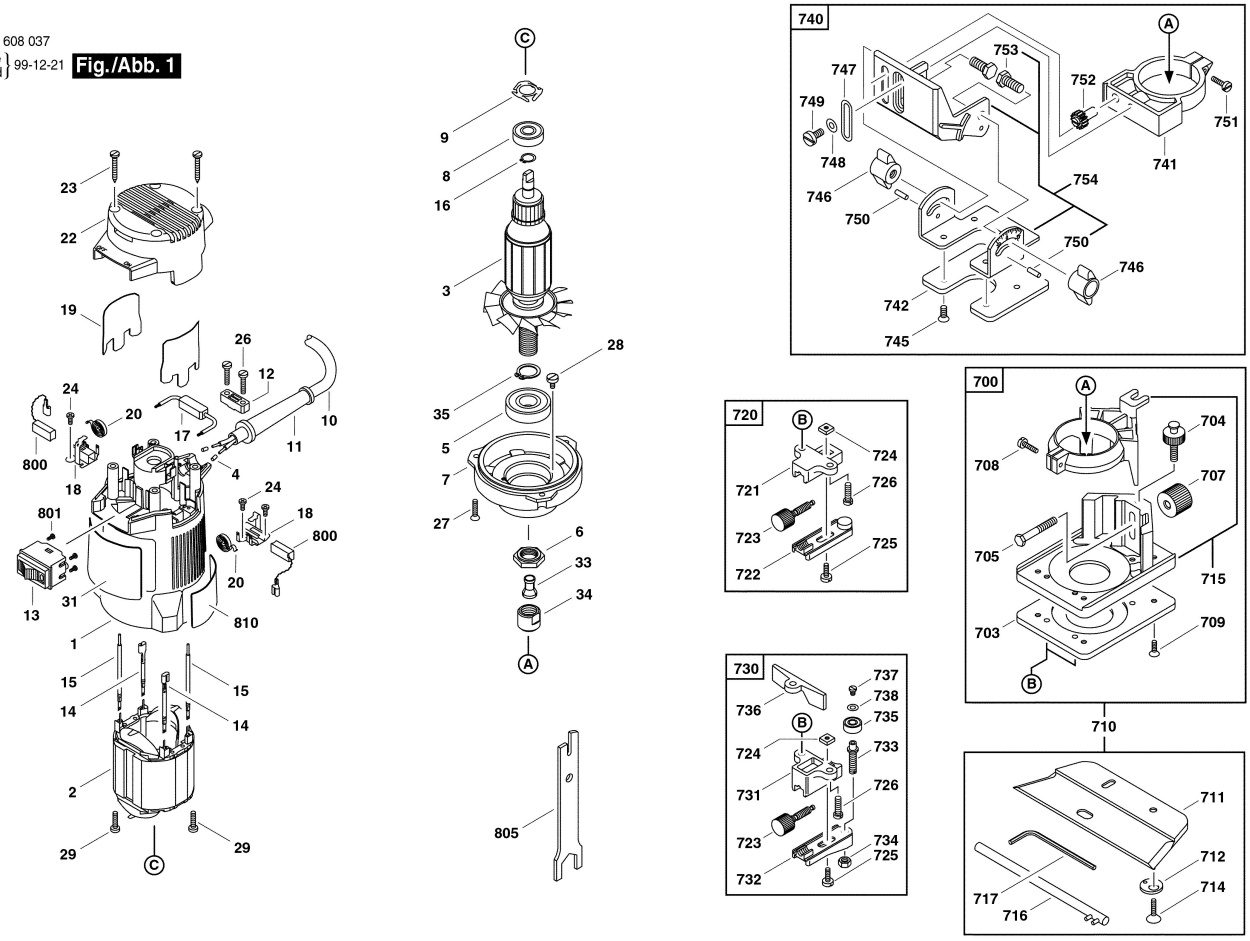
Fig./Abb. 1