0 601 608 034
Issue / Stand } 99-12-21
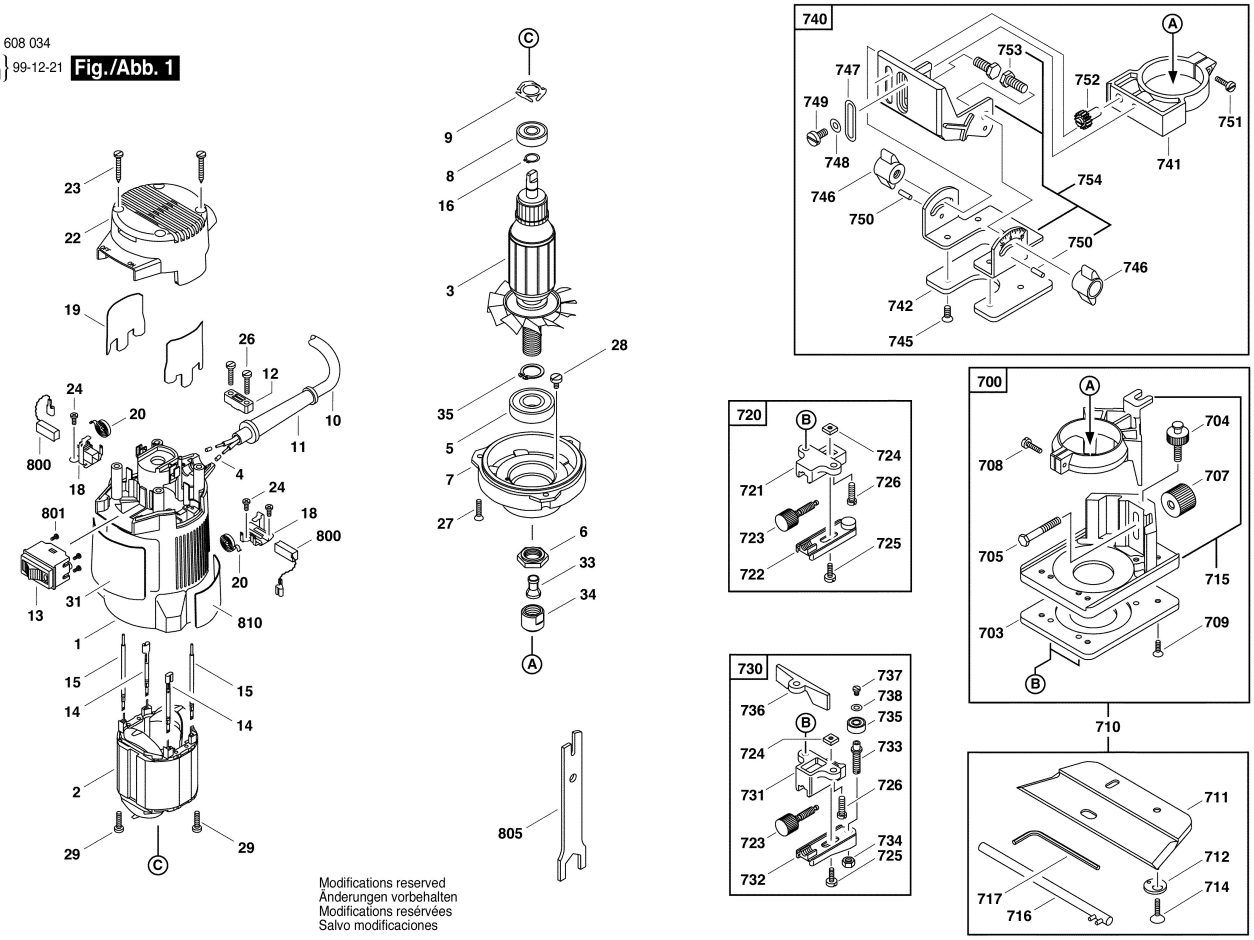
Fig./Abb. 1